to 82 percent SO_2 emission control efficiency at Site 1 to achieve the Class I PSD compliance.

The assumption of the de minimus GEP stack height regulation crediting a 213 feet (65m) allowance for modeling purposes is shown in Figure 4.6.1-8 to not impose any serious design constraints at Site 23 for the Case II scenario employing the Shell coal supply. Thus, an actual physical stack height of 213 feet could be utilized for this scenario at Site 23 provided a greater than or equal to 76.3 percent boiler SO_2 emission control efficiency is maintained as also shown in Figure 4.6.1-8. Since the currently attainable or BACT baseline for boiler SO_2 emission control for the Case II design utilizing the Shell coal supply is 84 percent, it can be concluded that SO_2 Class I PSD compliance at Site 23 does not present a major potential environmental impact problem area for currently envisioned plant design scenarios.

Potential Environmental Impacts for Air Quality Particulate Matter Emissions: Site 1. Since Billings, Montana, is currently a nonattainment area for particulates and a Class II-designated air quality area for SO_2, these potential environmental impacts were evaluated for both the previously discussed case design scenarios at candidate Site 1 for both the Westmoreland and Shell coal supplies.

The terrain map for the preliminary air quality screening analysis utilizing the VALLEY complex terrain air dispersion model for the Billings area with respect to a coal gasification plant located at Site 1 is shown graphically in Figure 4.6.1-9 and has been previously presented in Table 4.6.1-10.

The results of the air quality dispersion analyses for potential SO_2 Class II PSD violations in the Billings area from candidate Site 1 scenarios confirmed that, for the most stringent or "worst case," Case II design scenario employing a Westmoreland coal supply and the fundamental assumptions for baseline SO_2 emission control efficiencies of 90 percent for boiler emissions and 98.6 percent for emissions from the vent gas incinerator with a physical stack height of 625 feet, the 24-hour SO_2 Class II PSD increment would not be exceeded. Table 4.6.1-6 shows that the allowable 24-hour SO_2 Class II PSD increment is 91 ug/m^3, a factor of 18 higher than its Class I counterpart.

FIGURE 4.6.1-9

CROW POWER PLANT FEASIBILITY STUDY:

SITE 1, TERRAIN CONSIDERATIONS, BILLINGS AREA

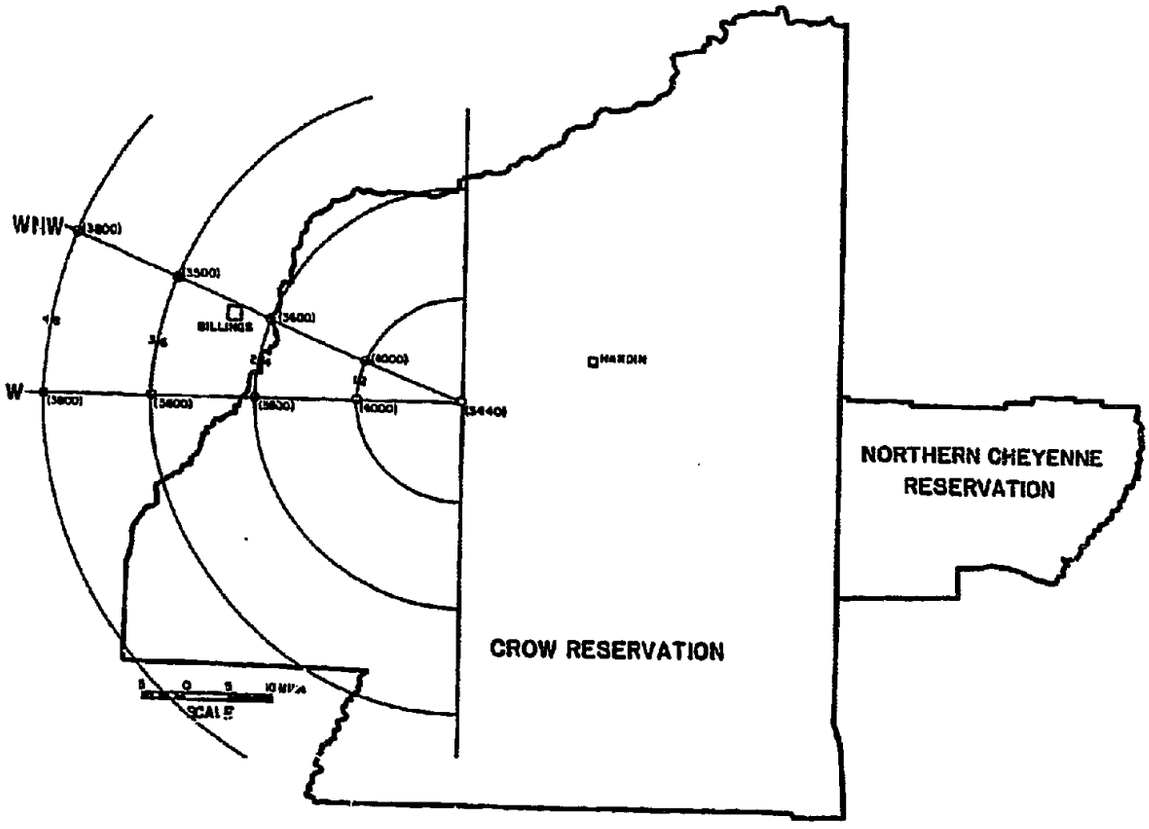

Areas in the United States, such as Billings in this study, that presently have lower ambient air quality for a pollutant, such as particulate matter, than specified in the National Ambient Air Quality Standards (NAAQS), as shown in Table 4.6.1-12, are designated by the EPA as nonattainment areas. However, it must recalled that particulate emissions from the plant are drastically reduced since an electrostatic precipitator (ESP), capable of achieving particulate matter removal efficiencies of 99.7 percent and in compliance with the NSPS requirement of 0.03 lb particulate matter/10^6 Btu, is specified as the major control or mitigation measure for the source particulate matter emissions emanating from the plant as previously presented in Tables 4.6.1.4 and 4.6.1-5 for the Case I and Case II design scenarios utilizing Westmoreland coal and the Case II design utilizing the Shell coal supplies.

Using the same design basis as the previously described Case II design with Westmoreland coal for the SO_2 Class II PSD increment analyses as the worst case scenario, it was found that particulate matter concentrations at representative receptor locations in the Billings area would be less than 0.1 ug/m^3. Pollutant concentrations of less than 0.1 ug/m^3 at a specific receptor location may be considered insignificant since the minimum level of precision for the VALLEY model in this type of analysis application is at least 0.1 ug/m^3 or greater. Additionally, field monitoring measurements of particulate matter increments would most certainly not exhibit greater precision than the analysis criterion. Therefore, based upon the results of the dispersion modeling, it is concluded that particulates emissions emanating from the presently conceived coal gasification plant design scenarios at Site 1 would not violate the nonattainment status for particulates in the Billings area and, hence, would not impose any seriously adverse environmental air quality impacts.

<u>Potential Environmental Impacts for Air Quality Particulate Matter Emissions: Site 23</u>. A VALLEY dispersion modeling analysis of the potential impact of particulate matter emissions from the worst-case Case II design scenario utilizing the Shell coal feed was performed at candidate Site 23 to confirm compliance with the Class I PSD increment requirements for the Northern Cheyenne Reservation. Results indicate that 24-hour particulate matter concentrations at receptor locations

TABLE 4.6.1-12

NATIONAL AMBIENT AIR QUALITY STANDARDS[a]

(ug/m^3)

Pollutant	Averaging Time	Primary Standard	Secondary Standard
SO_2	Annual	80	—
	24 hour	365	—
	3 hour	—	1,300
Particulate matter	Annual	75	60
	24 hour	260	150
NO_x (as NO_2)	Annual	100	100
O_3	1 hour	240	240
CO	8 hour	10,000	10,000
Lead	Quarterly	1.5	1.5
HC (non CH_4)	3 hour	160[b]	160[b]

[a]40 CFR Part 50. Reference Conditions = 760 mm Hg and 25 C.
[b]Not a standard; a guide to show achievement of the O_3 (ozone) standard.

within the Northern Cheyenne Reservation would be less than 0.1 ug/m^3. Thus, it may be concluded that the proposed Crow coal gasification plant with an SNG production rate of 250 MM SCF/D would be in compliance with the Class I PSD particulate matter increment at Site 23, principally due to the stringent emission control invoked by an electrostatic precipitator with a 99.4 percent particulate removal efficiency which is presently considered as the upper limit for the control technology (BACT) within the time frame for this project.

The potential environmental air quality impacts in the Site 23 area from particulate matter would arise from fugitive dusts from the nearby proposed Shell mining operation since Site 23 represents a potential "minemouth" siting opportunity as previously discussed. Hence, the primary mitigation measure recalling that compliance with the stringent Class I PSD increment for particulates with respect to the Northern Cheyenne Reservation is the major constraint, would be strict procedural control by properly implemented water spraying of the affected mining areas and adjacent access roads to minimize potential dusting from vehicular traffic and heavy mining equipment. However, it must be emphasized that Class I regulatory compliance in this instance would be the separate responsibility of Shell as the mine operator.

4.6.1.2 Mitigation Measures: Potential Air Quality Impacts

Primary emphasis on the mitigation of potential adverse air quality impacts due to the proposed Crow coal gasification project has been placed on the implementation of engineered control devices within the plant design as shown schematically in Figures 4.6.1-10, 4.6.1-11, and 4.6.1-12 which represent, respectively, the final air emission process block flow diagrams for the Case I and Case II plant design scenarios utilizing the Westmoreland coal feed and the Case II design scenario employing Shell coal. Although the numerical values cited in the figures reflect a nominal design production rate of 125 MM SCF/D SNG for the half-size plant rating, they serve to illustrate the intended design implementation of control devices to mitigate the salient potential environmental impacts.

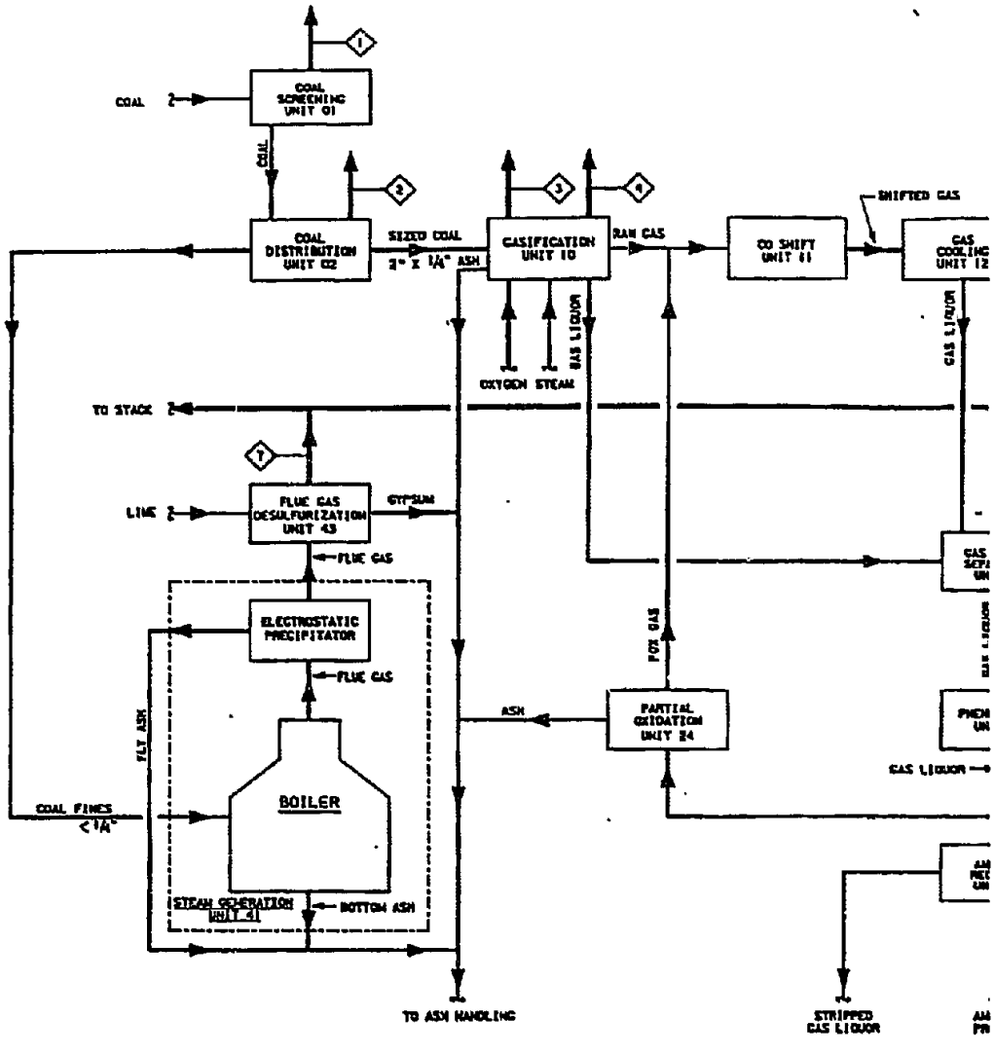

NOTE: NUMBERS IN PARENTHESES REFER TO NOTES AT RIGHT.

	1 COAL SCREENING	2 COAL DISTRIBUTION	3 GASIFICATION LOCK GAS VENT	4 (3) GASIFIER START-UP VENT	5 (4) HEATER FLUE GAS	6 SUPERHEATER FLUE GAS	7 BOILER FLUE GAS	8 (7) HEATER FLUE GAS	9 (8) PRODUCT STORAGE TANK FARM
O_2 LBS/HR				CONFIDENTIAL	942	20.544	88.341	257	
N_2 LBS/HR			1		23.796	312.874	1,257,829	6,751	
CO_2 LBS/HR			253		4,870	950.730	369,521	1,410	
H_2O LBS/HR			1		4,717	53,534	125,012	1,338	
SO_2 LBS/HR						211	(5) 323		
H_2S LBS/HR			2						
COS LBS/HR			TRACE						
NO_x LBS/HR					22	225	848	6	
CO LBS/HR			65		2	12	98	TRACE	
CH_4 LBS/HR			33						
H_2 LBS/HR			15						
HYDROCARBONS LBS/HR			5						5
PARTICULATES LBS/HR	4	2					(6) 47		
TOTAL FLOW LBS/HR	4	2	405		34,449	1,344,530	1,906,021	9,772	5
TOTAL FLOW LBMOL/HR			19		1,253	36,748	86,832	335	
TEMPERATURE °F	AMB.	AMB.			300	400	128	300	AMB.
ELEVATION OF RELEASE FT	75	150	200		100	625	625	100	40

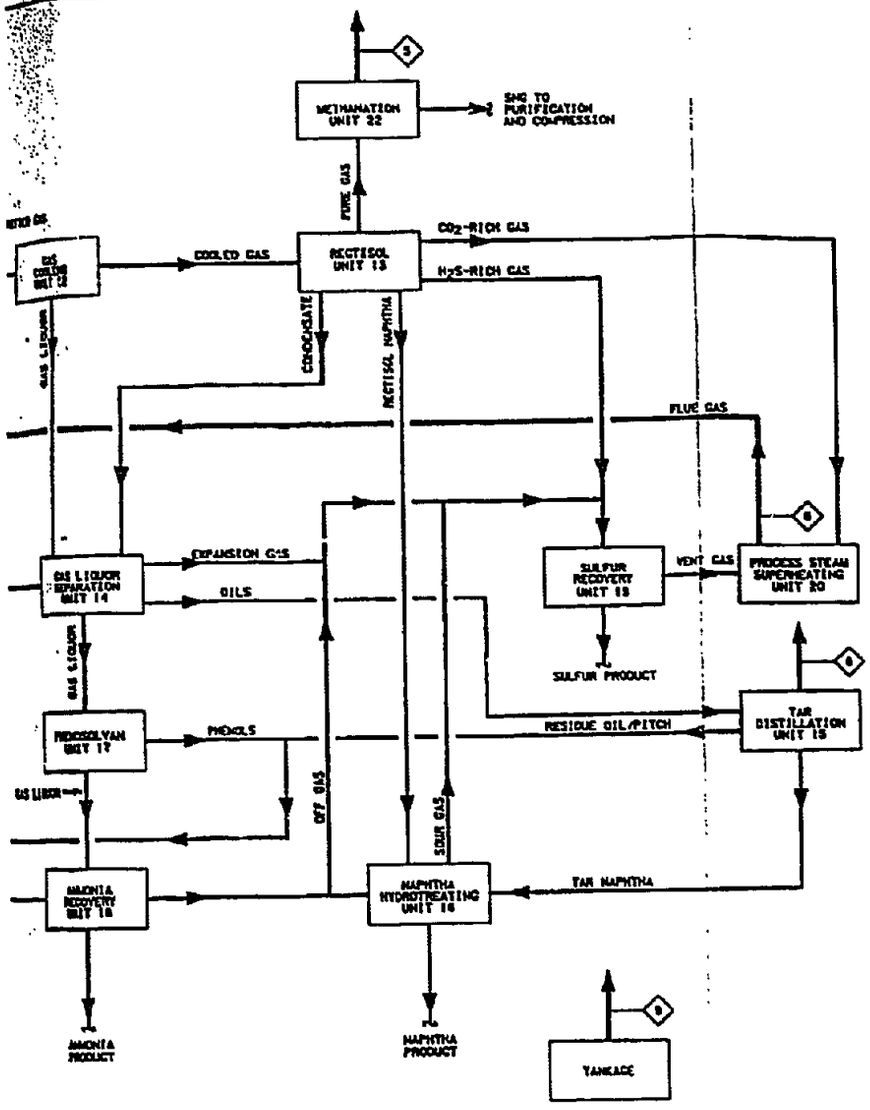

USE OR DISCLOSURE OF REPORT DATA IS SUBJECT TO THE RESTRICTION ON THE NOTICE PAGE AT THE FRONT OF THIS REPORT

NOTES:

1. BOILER DESIGN MEETS EPA CODE OF FEDERAL REGULATIONS-TITLE 40
   EMISSION LIMITS:
   SO_2 = 1.2 LB/MBTU
   NO_x = 0.5 LB/MBTU
   PARTICULATES = 0.02 LB/MBTU
2. BOILER FEED COAL = 98.6 T/HR (AS RECEIVED).
   GASIFIER FEED COAL = 450 T/HR (AS RECEIVED).
3. COMPOSITION AND DURATION OF GASIFIER START-UP VENT ARE CONFIDENTIAL LURGI INFORMATION.
   MAXIMUM EMISSIONS:
   SO_2 = 372 LBS/HR
   HYDROCARBONS = 468 LBS/HR
4. CATALYST REDUCTION REQUIRES FUEL GAS. FLOW SHOWN IS OF SHORT DURATION.
5. SO_2 VENTED IS BASED ON FGD REMOVAL EFFICIENCY OF 90%.
6. PARTICULATES VENTED ARE BASED ON AN EXIT CONCENTRATION OF 0.013 GR/SCF. OVERALL REMOVAL EFFICIENCY IS 99.7%.
7. HEATER FLUE GAS EMISSIONS ESTIMATED BASED ON THE FOLLOWING HEATER DUTY:
   TAR DISTILLATION 12.2 MMBTU/HR
8. HYDROCARBON EMISSIONS FROM STORAGE TANKS BASED ON FLOATING ROOF DESIGN WITH SECONDARY SEALS AND VAPOR RECOVERY SYSTEMS UTILIZED ON CONE ROOF TANKS.
9. THE TEMPERATURES, FLOW QUANTITIES AND COMPOSITIONS SHOWN ARE TO BE USED SOLELY FOR PROCESS DESIGN PURPOSES AND ARE NOT NECESSARILY THE CONDITIONS WHICH WILL BE ATTAINED DURING ACTUAL OPERATIONS.

FIGURE 4.6.1-10

FLUOR

D.P. HALVERSON
C.C. ABATAY
K.O. SMITH
R.H. CARTHI
R.L. ANG

CASE 1 BLOCK FLOW DIAGRAM AIR EMISSIONS
CASE: WESTMORELAND COAL-POWER SELF-SUFFICIENCY
CROW TRIBE OF INDIANS SYNFUELS FEASIBILITY STUDY

NONE | 835704-00-4-205 | 1

001 5510020 35

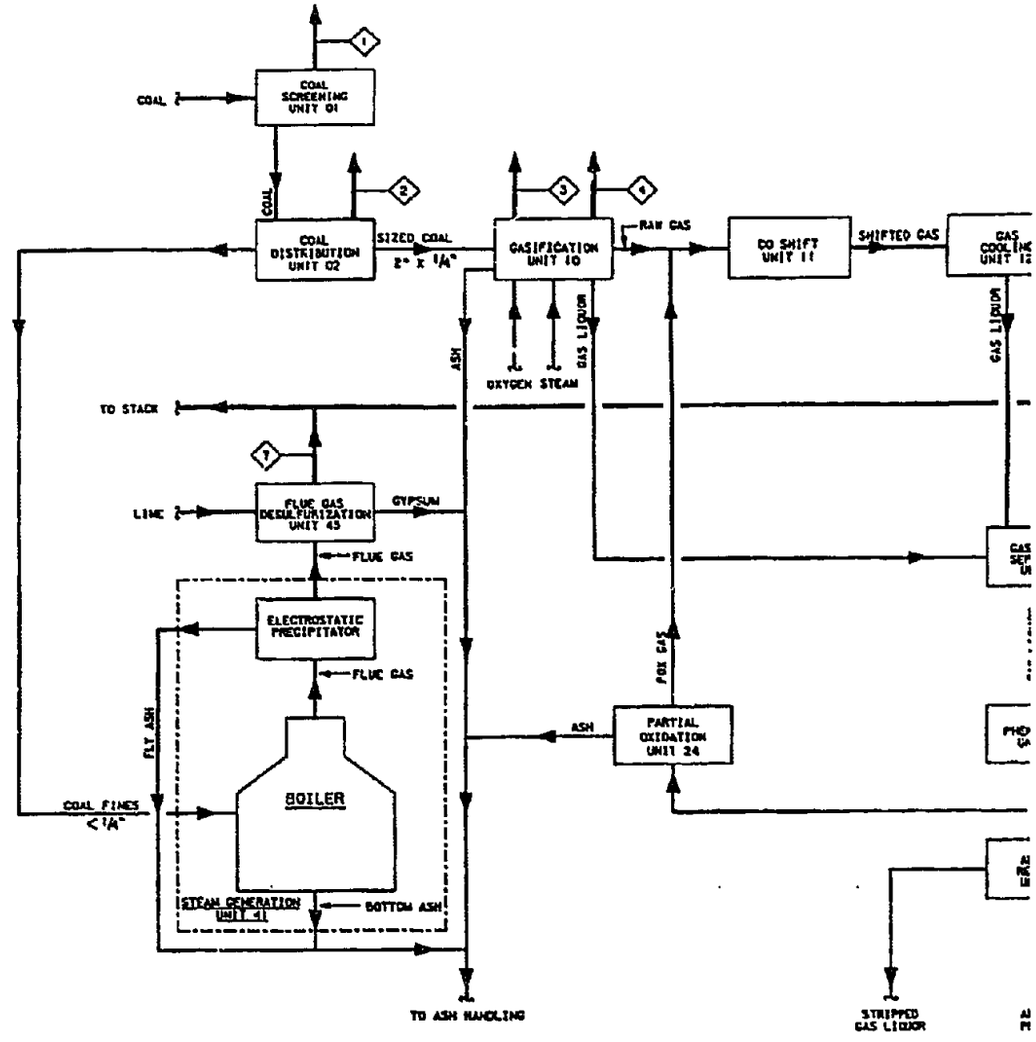

NOTE: NUMBERS IN PARENTHESES REFER TO NOTES AT RIGHT.

		1 COAL SCREENING	2 COAL DISTRIBUTION	3 GASIFICATION LOCK GAS VENT	4 (3) GASIFIER START-UP VENT	5 (4) HEATER FLUE GAS	6 SUPERHEATER FLUE GAS	7 BOILER FLUE GAS	8 (7) HEATER FLUE GAS	9 (8) PRODUCT STORAGE TANK FARM
O_2	LBS/HR				CONFIDENTIAL	842	20.544	268.832	267	
H_2	LBS/HR			1		23.796	312.874	3.827.712	6.751	
CO_2	LBS/HR			283		4.970	950.730	1.112.320	1.410	
H_2O	LBS/HR			1		4.717	59.934	593.442	1.338	
SO_2	LBS/HR						211	(5) 963		
H_2S	LBS/HR			2						
COS	LBS/HR			TRACE						
NO_x	LBS/HR					22	225	2.584	8	
CO	LBS/HR			85		2	12	300	TRACE	
CH_4	LBS/HR			33						
N_2	LBS/HR			15						
HYDROCARBONS	LBS/HR			9						5
PARTICULATES	LBS/HR	8	2					(6) 143		
TOTAL FLOW	LBS/HR	5	2	403		34.449	1.344.530	5.856.316	9.772	5
TOTAL FLOW	LMOL/HR			11		1.233	36.748	203.438	355	
TEMPERATURE	°F	AMB.	AMB.			300	400	128	300	AMB.
ELEVATION OF RELEASE	FT	75	150	200		100	825	825	100	40

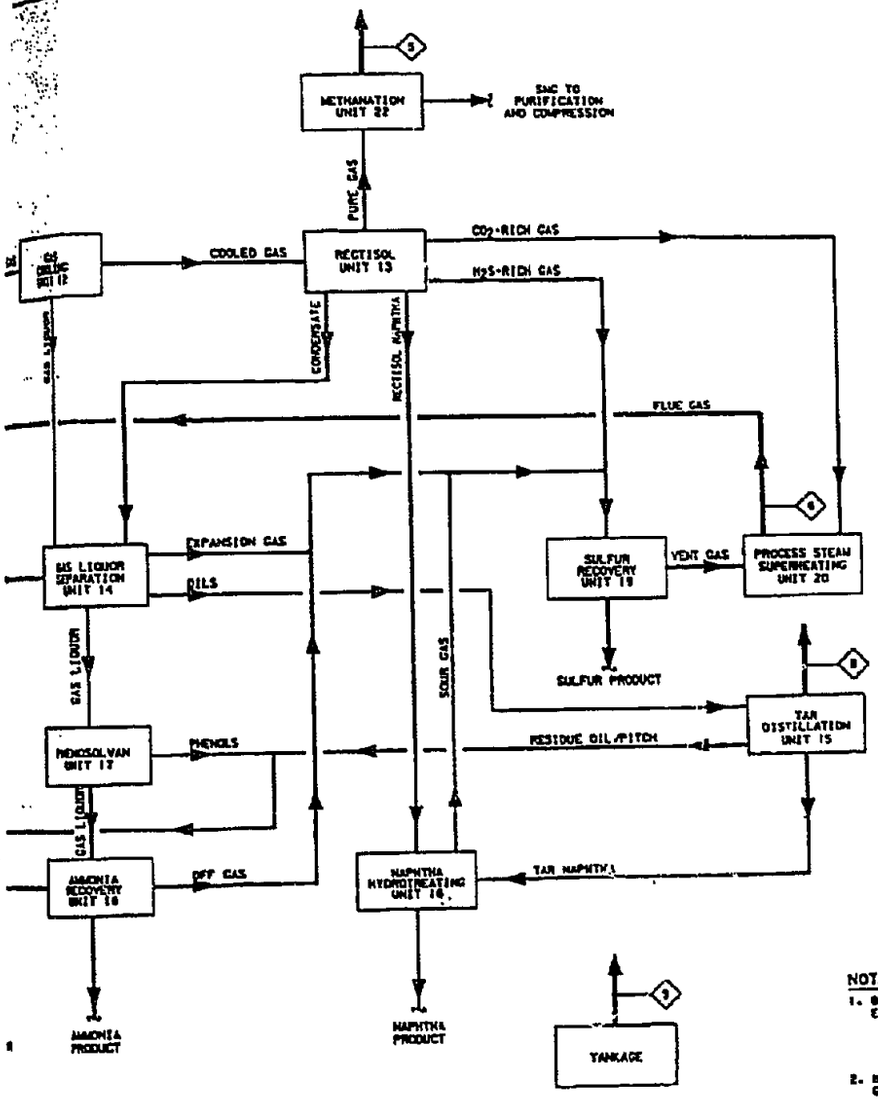

USE OR DISCLOSURE OF REPORT DATA IS SUBJECT TO THE RESTRICTION ON THE NOTICE PAGE AT THE FRONT OF THIS REPORT

NOTES:

1. BOILER DESIGN MEETS EPA CODE OF FEDERAL REGULATIONS-TITLE 40
   EMISSION LIMITS:
   SO_2 = 1.2 LB/MMBTU
   NO_x = 0.5 LB/MMBTU
   PARTICULATES = 0.03 LB/MMBTU
2. BOILER FEED COAL = 300 T/HR (AS RECEIVED).
   GASIFIER FEED COAL = 450 T/HR (AS RECEIVED).
3. COMPOSITION AND DURATION OF GASIFIER START-UP VENT ARE CONFIDENTIAL LURGI INFORMATION.
   MAXIMUM EMISSIONS:
   SO_2: 372 LBS/HR
   HYDROCARBONS: 468 LBS/HR
4. CATALYST REDUCTION REQUIRES FUEL GAS. FLOW SHOWN IS OF SHORT DURATION.
5. SO_2 VENTED IS BASED ON FGD REMOVAL EFFICIENCY OF 80%.
6. PARTICULATES VENTED ARE BASED ON AN EXIT CONCENTRATION OF 0.013 GR/SCF. OVERALL REMOVAL EFFICIENCY IS 99.7%.
7. HEATER FLUE GAS EMISSIONS BASED ON THE FOLLOWING
   HEATER DUTY:
   TAR DISTILLATION 12.2 MM BTU/HR
8. HYDROCARBON EMISSIONS FROM STORAGE TANKS [illegible]ED ON FLOATING ROOF DESIGN WITH SECONDARY SEALS AND VAPOR RECOVERY SYSTEMS UTILIZED ON CONE ROOF TANKS.
9. THE TEMPERATURES, FLOW QUANTITIES AND COMPOSITIONS SHOWN ARE TO BE USED SOLELY FOR PROCESS DESIGN PURPOSES AND ARE NOT NECESSARILY THE CONDITIONS WHICH WILL BE ATTAINED DURING ACTUAL OPERATIONS.

FIGURE 4.6.1-11

FLUOR

D.P. HALVERSON
C.R. ABATAY
V. BELLINTO
R. McCARTHY
R. LANG

BLOCK FLOW DIAGRAM
CASE 2 AIR EMISSIONS
CASE: WESTMORELAND COAL - 40% FINES - SNG
CROW TRIBE OF INDIANS
SYNFUELS FEASIBILITY STUDY

NONE | 835704-00-4-105 | 1

001 33700105

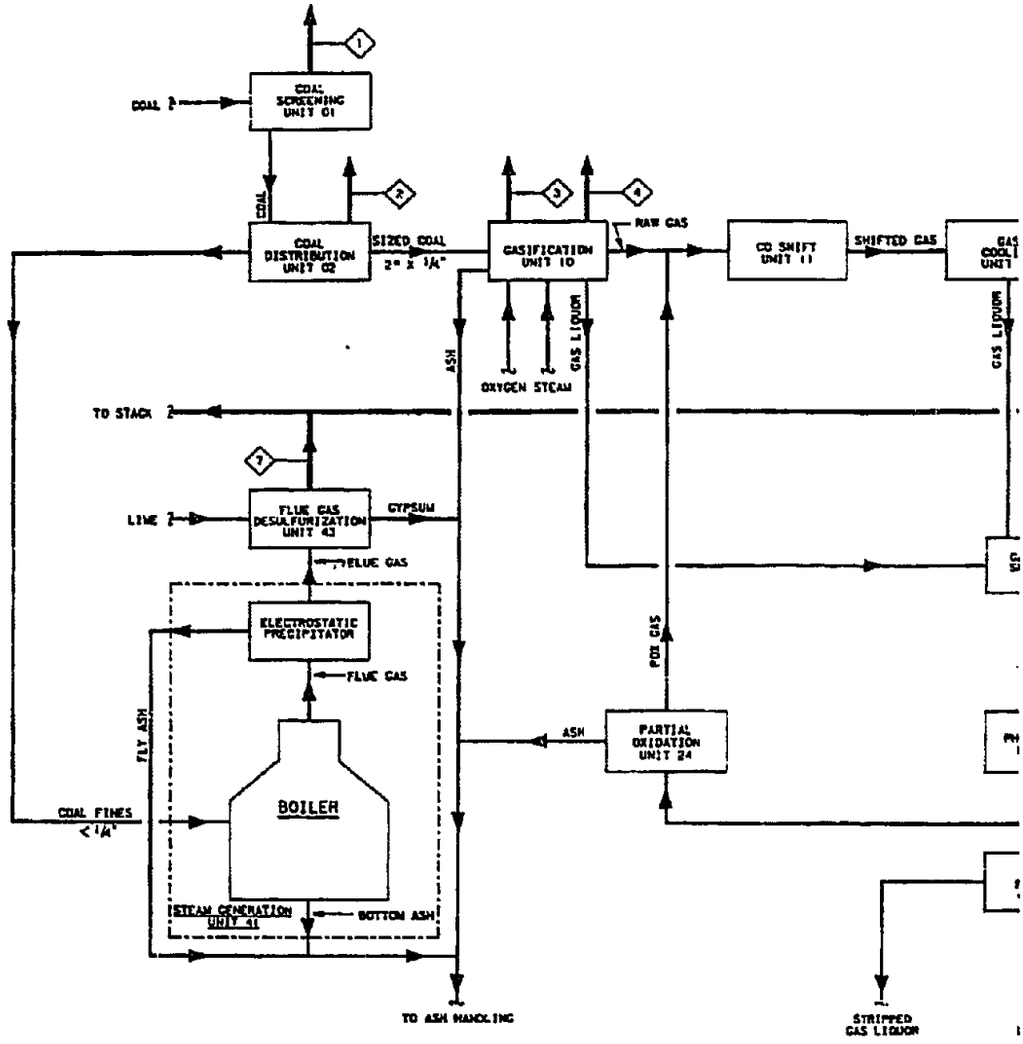

NOTE: NUMBERS IN PARENTHESES REFER TO NOTES AT RIGHT.

		1 COAL SCREENING	2 COAL DISTRIBUTION	3 GASIFICATION LOCK GAS VENT	4 (3) GASIFIER START-UP VENT	5 (4) HEATER FLUE GAS	6 SUPERHEATER FLUE GAS	7 BOILER FLUE GAS	8 (7) HEATER FLUE GAS	9 (8) PRODUCT STORAGE TANK FARM
O_2	LBS/HR				CONFIDENTIAL	949	23,510	278,752	448	
N_2	LBS/HR			2		24,226	313,695	3,958,360	11,437	
CO_2	LBS/HR			336		5,147	137,100	1,129,827	2,430	
H_2O	LBS/HR			1		4,675	57,757	611,820	2,207	
SO_2	LBS/HR						90	151 717		
H_2S	LBS/HR			1						
COS	LBS/HR			TRACE						
NO_x	LBS/HR					20	222	2,667	10	
CO	LBS/HR			112		2	11	293	1	
CH_4	LBS/HR			43						
H_2	LBS/HR			30						
HYDROCARBONS	LBS/HR			8		TRACE				8
PARTICULATES	LBS/HR	5	2					(6) (4)		
TOTAL FLOW	LBS/HR	5	2	523		35,021	1,332,385	5,882,584	16,533	8
TOTAL FLOW	LBMOL/HR			25		1,271	35,436	209,823	600	
TEMPERATURE	°F	AMB.	AMB.			300	400	128	300	AMB.
ELEVATION OF RELEASE	FT	75	150	200	↑	100	250	250	100	40

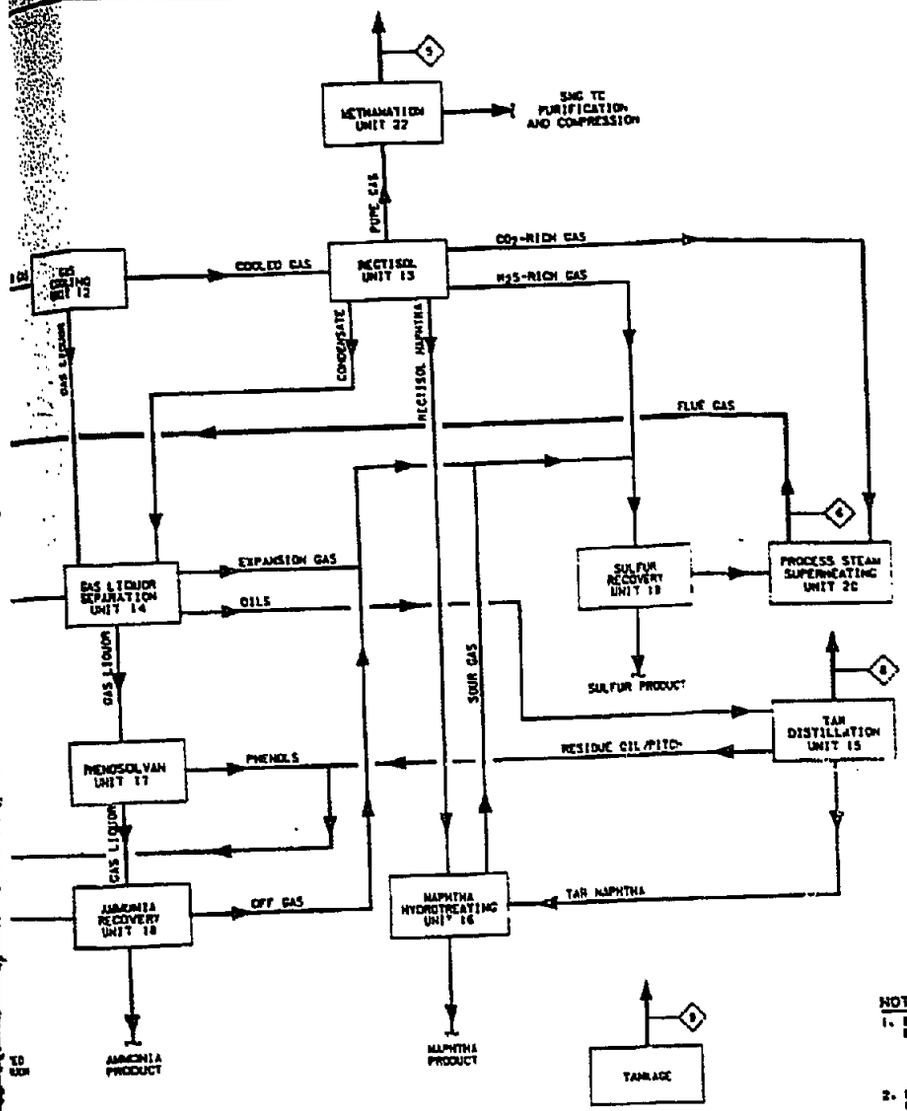

USE OR DISCLOSURE OF REPORT DATA IS SUBJECT TO THE RESTRICTION ON THE NOTICE PAGE AT THE FRONT OF THIS REPORT

NOTES:

1. BOILER DESIGN MEETS EPA CODE OF FEDERAL REGULATIONS-TITLE 40
   EMISSION LIMITS:
   SO_2 = 1.2 LB/MMBTU
   NO_x = 0.5 LB/MMBTU
   PARTICULATES = 0.03 LB/MMBTU
2. BOILER FEED COAL =293.3 T/HR (AS RECEIVED).
   GASIFIER FEED COAL = 440 T/HR (AS RECEIVED).
3. COMPOSITION AND DURATION OF GASIFIER START-UP VENT ARE CONFIDENTIAL (LURGI INFORMATION).
   MAXIMUM EMISSIONS:
   SO_2: 160 LBS/HR
   HYDROCARBONS: 554 LBS/HR
4. CATALYST REDUCTION REQUIRES FUEL GAS. FLOW SHOWN IS OF SHORT DURATION.
5. SO_2 VENTED IS BASED ON FGD REMOVAL EFFICIENCY OF 84%.
6. PARTICULATES VENTED ARE BASED ON AN EXIT CONCENTRATION OF 0.013 GR/SCF. OVERALL REMOVAL EFFICIENCY IS 99.4%.
7. HEATER FLUE GAS EMISSIONS BASED ON THE FOLLOWING
   HEATER DUTY:
   TAR DISTILLATION 20.3 MM BTU/HR
8. HYDROCARBON EMISSIONS FROM STORAGE TANKS BASED ON FLOATING ROOF DESIGN WITH SECONDARY SEALS AND VAPOR RECOVERY SYSTEMS UTILIZED ON CONE ROOF TANKS.
9. THE TEMPERATURES, FLOW QUANTITIES AND COMPOSITIONS SHOWN ARE TO BE USED SOLELY FOR PROCESS DESIGN PURPOSES AND ARE NOT NECESSARILY THE CONDITIONS WHICH WILL BE ATTAINED DURING ACTUAL OPERATIONS.

FIGURE 4.6.1-12

FLUOR

D.P. HALVERSON
G.F. ABATAY
E.D. GELMITO
H. McCARTHY
R. LANG

BLOCK FLOW DIAGRAM
CASE 2 AIR EMISSIONS
CASE: SHELL COAL - 40% FINES - SNG
CROW TRIBE OF INDIANS
SNYFUELS FEASIBILITY STUDY
NONE
835704-00-4-405
1
001 835700405

Since the primary control device for the mitigation of plant air particulate emissions, the ESP, presents a lesser potential problem area in terms of this project based upon the results of the dispersion air modeling results, major emphasis has centered on the selection of control devices to mitigate the SO_2 emissions emanating from the plant process units.

Davy McKee FGD Unit. An evaluation of four potential vendor proposals for a FGD unit to attain a 90 percent SO_2 emission control efficiency for the boiler plant with a Westmoreland coal feed and 84 percent SO_2 emission control efficiency utilizing the alternate coal supply from Shell was conducted by Fluor as discussed in detail in Volumes II and V of this report. Summarily, the proposed Davy McKee FGD unit was selected primarily on the basis of process economics for purposes of this feasibility study. Additionally, the Davy McKee proposal was the only vendor to supply a firm price quotation for an FGD unit with SO_2 emission control efficiencies in excess of 90 percent.

The Davy S-H flue gas desulfurization process, shown in Figure 4.6.1-13, is a wet scrubbing process based on lime. Particulate removal with an electrostatic precipitator will be provided, as previously discussed, upstream of the FGD system.

The Davy S-H process has four main steps: SO_2 absorption, oxidation, lime addition, and solids separation. Calcium ions in the form of calcium hydroxide, $Ca(OH)_2$, calcium formate, $Ca(COOH)_2$, and calcium chloride, $CaCl_2$, in a clear solution are used to absorb sulfur dioxide from the flue gas. The resultant intermediate, water soluble calcium bisulfite, $CA(HSO_3)$, is then oxidized to calcium sulfate dihydrate, $CaSO_4 \cdot 2H_2O$, and precipitated from the system as a stable gypsum product. Calcium ions lost with the gypsum are continuously replaced by the addition of calcium oxide, CaO. The gypsum is recovered as a dry filter cake. A flue gas booster fan provides the energy required for pressure losses through the FGD system.

FIGURE 4.6.1-13

DAVY S-H PROCESS: FLUE GAS DESULFURIZATION

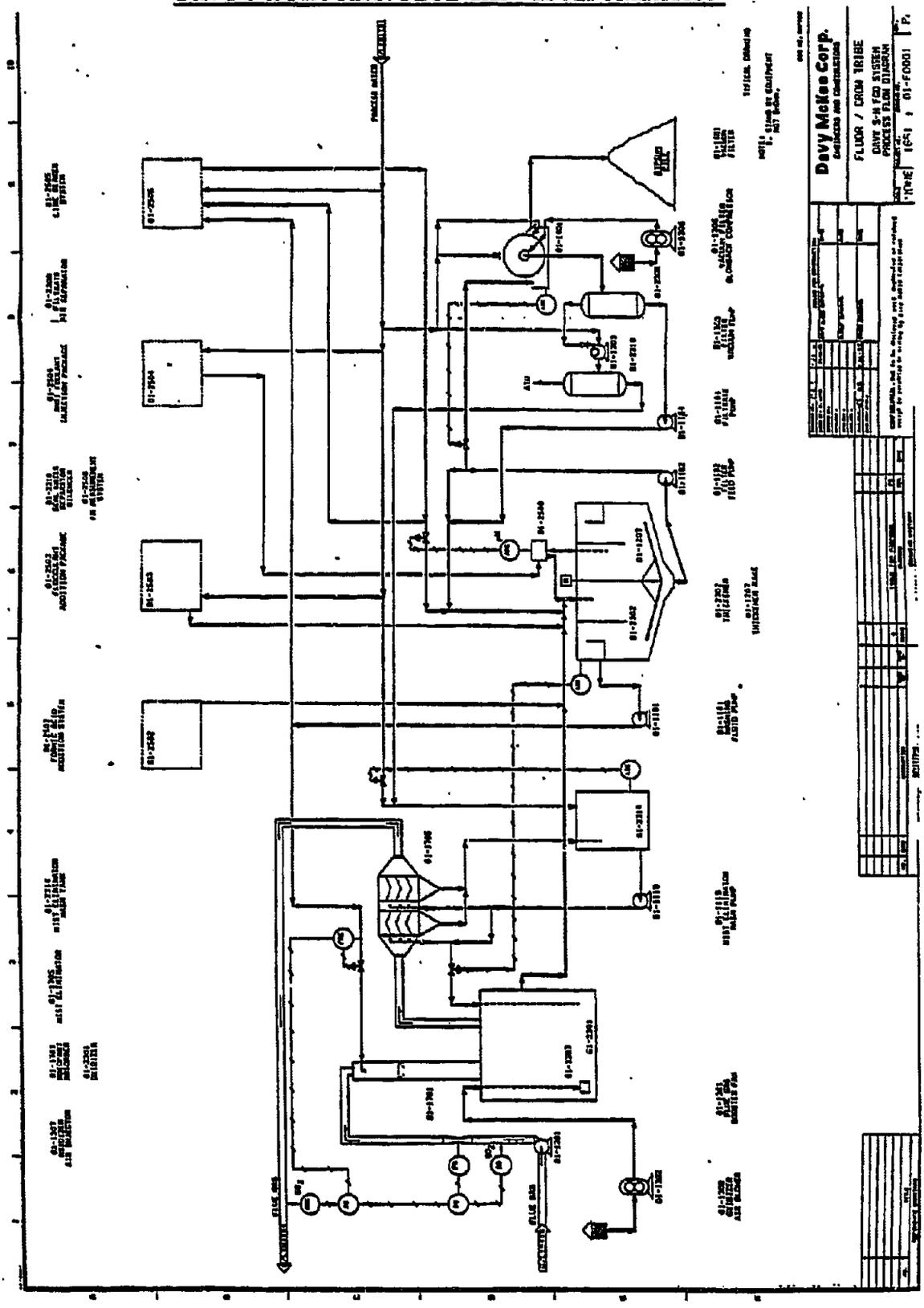

The flue gas is contacted in the ROTOPART absorbers concurrently with a washing fluid containing $Ca(OH)_2$, $Ca(COOH)_2$, and $CaCl_2$. The absorbed SO_2 reacts as follows to form $Ca(HSO_3)_2$ which is water- soluble:

$$Ca^{+2} + 2OH^- + 2SO_2 \rightleftharpoons Ca^{+2} + 2HSO_3^-$$

As OH^- ions from the solution are consumed in the absorption of SO_2, an abundance of H^+ ions are made available.

$$H_20 \rightleftharpoons H^+ + OH^-$$

The pH of the solution drops rapidly to about 5.0.

By reacting with H^+ ions to form formic acid, HCOOH, the formate ions act to control the pH drop, buffering the solution in the pH range 4.5 to 5.0, a range that assures formation of $Ca(HSO_3)_2$.

$$HCOO^- + H^+ \rightleftharpoons HCOOH$$

Equilibrium is shifted to the right as a result of excess H^+ ions. By controlling the drop in pH, a high SO_2 removal takes place in the pH range 4.0 to 5.8.

After the formate ion concentration decreases, the buffering effect is weakened and the pH of the scrubbing fluid drops to a pH of 4.0 which is the optimum for oxidation. No pH adjustment is required prior to oxidation.

The ROTOPART absorber consists of one or more absorber tubes sized on a residence time/velocity criteria basis. The velocity should be low enough to allow time for $Ca(HSO_3)_2$ formation. The residence time must be low enough to prevent oxidation of the intermediate $Ca(HSO_3)_2$ to $CaSO_4 \cdot 2H_20$ due to oxygen in the flue gas.

Washing fluid is introduced into each ROTOPART absorber tube by means of hollow cone spray nozzles arranged in one plane. The absorbing tubes function as spray

chambers but have one or more water-shedding rings (low pressure drop Venturi throats) to increase velocity and direct the washing fluid back to the center of the duct, thus preventing it from running down the walls as an inactive film.

The shedding rings increase the droplet surface area available for contact and provide the intimate mixing of gas and liquid phases necessary for mass transfer. The contact velocity and the number of water shedding rings required are determined by the SO_2 content of the feed gas and the degree of desulfurization required.

In the oxidizer, air is used to convert bisulfite ion to calcium sulfate dihydrate (gypsum) crystals.

$$Ca^{+2} + 2HSO_3^- + 2H^+ + 2OH^- + O_2 \rightleftharpoons CaSO_4 \cdot 2H_2O + 2H^+ + SO_4^{-2}$$

The formation of sulfuric acid, H_2SO_4, during oxidation further reduces the pH of the solution from 4.0 to about 3.5.

In the mixing channel, slurried lime, $Ca(OH)_2$, is added to the scrubbing fluid to replenish calcium ions consumed by the formation of gypsum in the oxidizer and to adjust the pH value to that required for SO_2 absorption.

$$Ca(OH)_2 \rightleftharpoons Ca^{+2} + 2OH^-$$

and

$$2HCOOH + Ca^{+2} + 2OH^- \rightleftharpoons Ca^{+2} + 2HCOO^- + 2H_2O$$

The sulfuric acid formed in the oxidizer is converted into additional gypsum.

$$2H^+ + SO_4^{-2} + Ca^{+2} + 2OH^- \rightleftharpoons CaSO_4 \cdot 2H_2O$$

A small amount of formic acid is added to make up for losses of calcium formate in the wet filture cake produced downstream and for traces of formic acid vapor with

the flue gas from the ROTOPART. Turbulence in the mixing channel provides adequate mixing of the added chemicals.

The gypsum crystals formed in the oxidizer and mixing channels are separated from the washing fluid in the thickener. The separation is achieved by reducing the fluid velocity below the solids settling velocity so that individual $CaSO_4 \cdot 2H_2O$ crystals settle to the bottom. The crystals (10 to 30 percent slurry) are pumped from the bottom of the thickener to a vacuum filter. The vacuum filter produces a gypsum cake containing approximately 77 percent solids (23 percent free H_2O). The dry cake is a high grade gypsum (95 to 97 percent $CaSO_4 \cdot 2H_2O$ with less than 0.5 percent $CaSO_3 \cdot 1/2H_2O$). The filtrate is recirculated to the thickener. The clear overflow from the top of the thickener is returned to the ROTOPART as washing fluid which normally provides a closed washing fluid loop.

A lime storage and slaking system is provided to prepare and distribute the lime consumed by the process. A lime day bin receives lime from a lime storage bin. A vibrating bin discharger feeds lime into a gravimetric feeder which controls lime addition to the lime slaker. A combination of clean make-up water and washing fluid are used to slake the lime to a 10 to 20 percent $Ca(OH)_2$ slurry. A 15-minute buffer tank holds the lime slurry while it is pumped continuously to the 12-hour lime slurry surge tank. From the surge tank, the lime slurry is pumped to the mixing channel for mixing with the washing fluid.

Equipment packages are also included for storage and distribution of the following chemicals:

formic acid

antifoulant (for pH measurement system), and

flocculant (for use only with high fly ash particulate load).

Steam is listed as an import at 150 psig. Steam is used only during shutdown of a boiler or the FGD system to heat seal air for isolation dampers. Heating isolation dampers prevents acid mist condensation and subsequent corrosion on the metal damper surface.

Lurgi Classification Process: Major Gaseous Emission Control Units. The major units within the Lurgi coal gasification process design as conceived by Fluor that serve as both product SNG purification units and gaseous emission control devices within the overall gasification process are the ADIP, Claus, SCOT, and Stretford units as presented in the process flow diagrams denoted as Figures 4.6.1-14, 4.6.1-15, 4.6.1-16, and 4.6.1-17, respectively. Since these units constitute the principal substantiation of mitigation measures for reducing gaseous emissions to the ambient atmosphere from the gasification process a brief discussion of each process is presented (detailed discussion appears in Volume II of this report).

ADIP Process. The Shell ADIP process section, as shown in the process flow diagram denoted as Figure 4.1.6-14, employs a 25 to 35 percent aqueous solution of diisopropanolamine (DIPA) to selectively absorb the hydrogen sulfide (H_2S) gas stream discharged by the Rectisol process. Regeneration of this solution through the application of heat releases a concentrated H_2S gas suitable for operation of the Claus unit.

Claus Unit. The process flow diagram as shown in Figure 4.6.1-15 accepts process gas from the previously described ADIP section of the plant. A "split-stream" Claus process is employed as shown in the above process flow diagram and is typical of most coal conversion processes since the acid gas stream produced as a result of the aforementioned treatment generally will contain CO_2 in excess of 30 percent. In the split-stream process, the acid gas is split into two streams, one of which enters the combustion or reaction furnace (19HT-D21 in Figure 4.6.1-15) where H_2S is oxidized to SO_2 using an approximately stoichiometric quantity of air. Hot gases enter the combustion furnace where enough residence time is provided to allow for the Claus reaction to reach equilibrium. The gas is then passed through a waste heat boiler (19E-0121, Figure 4.6.1-15) where the elemental sulfur produced is removed. The product gas from the combustion reaction is then combined with the "uncombusted"

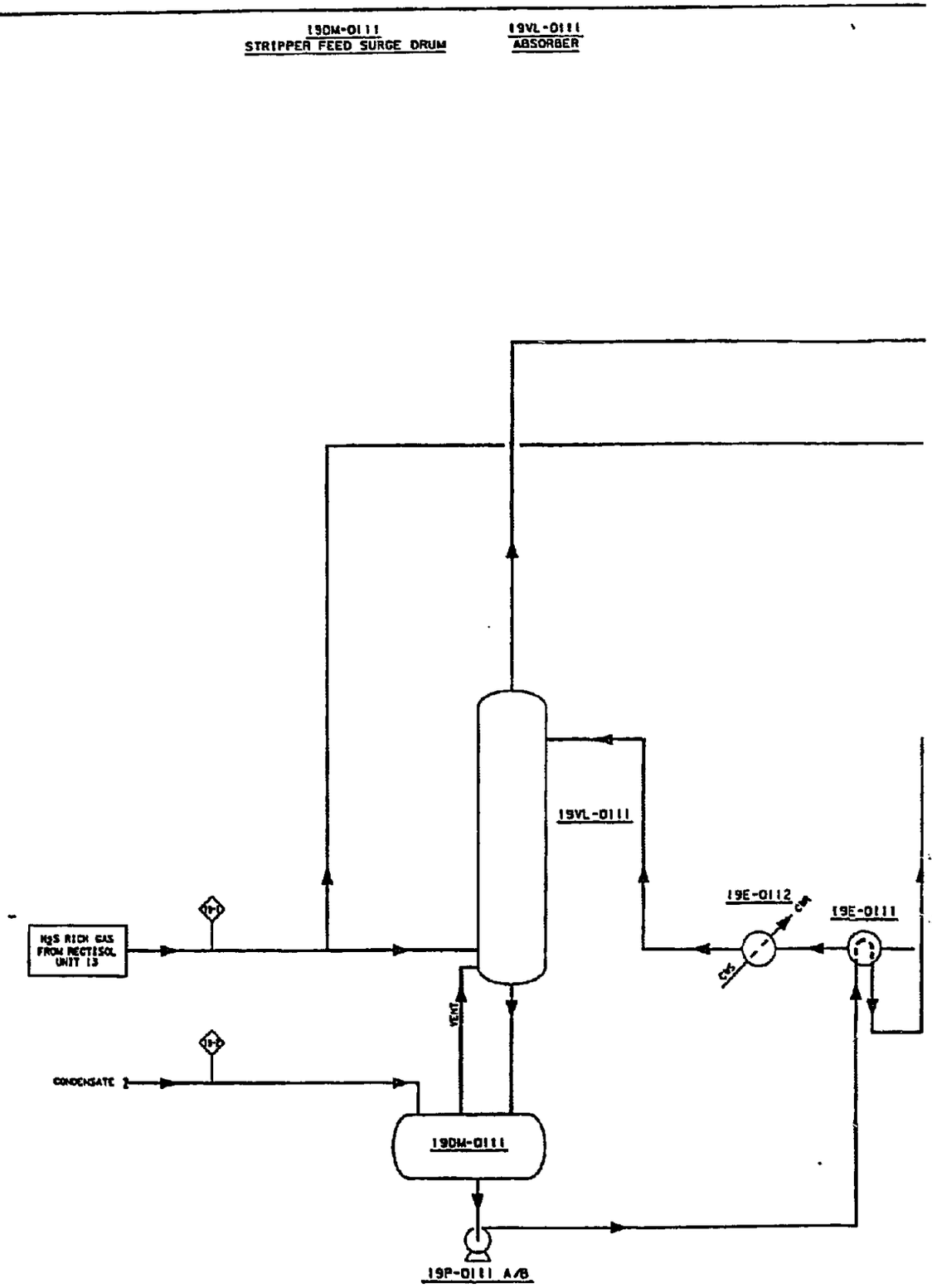
19DM-0111
STRIPPER FEED SURGE DRUM
19VL-0111
ABSORBER
19VL-0111
19E-0112
19E-0111
H2S RICH GAS
FROM RECTISOL
UNIT 13
VENT
CONDENSATE
19DM-0111
19P-0111 A/B

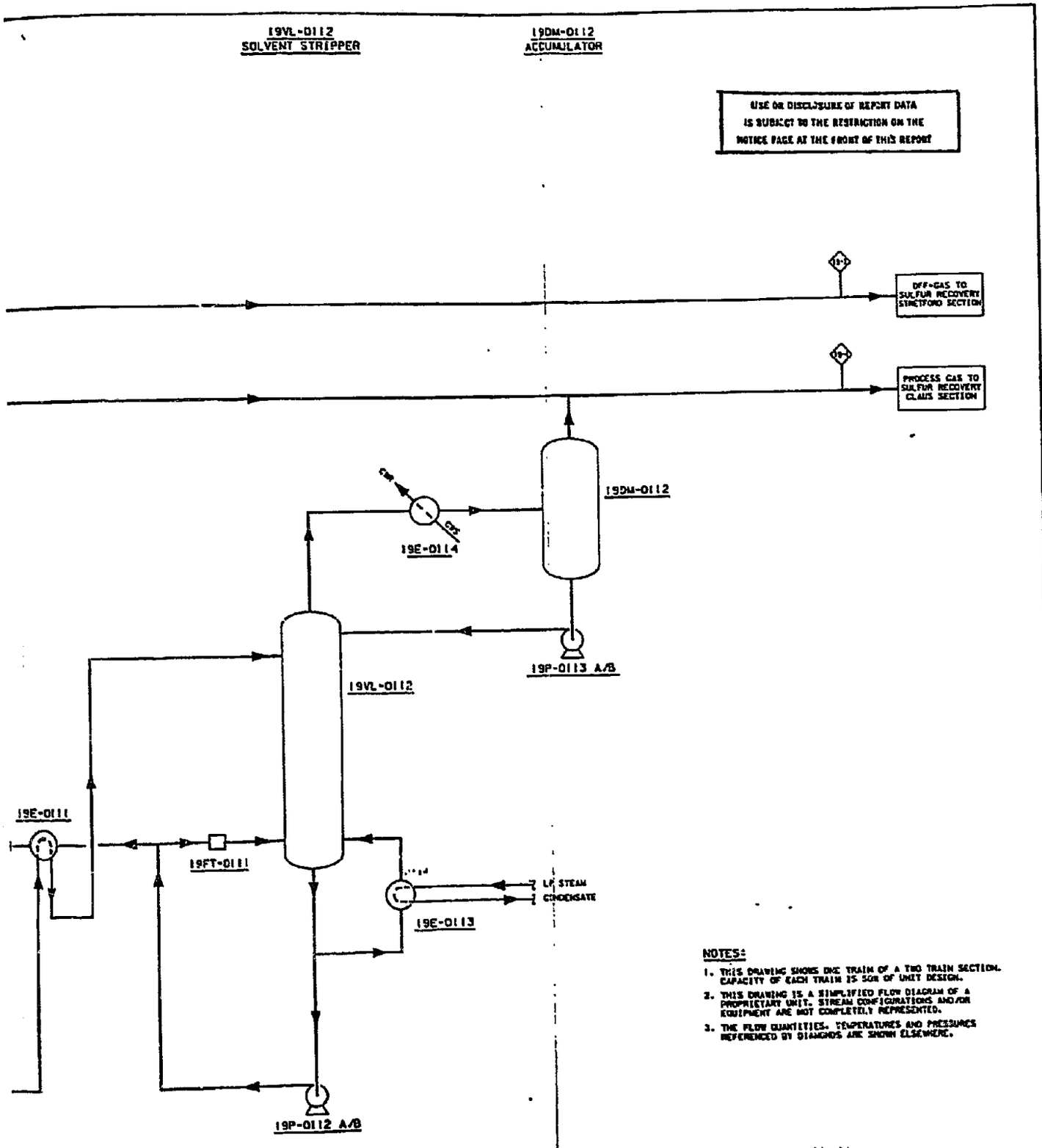

NOTES:

1. THIS DRAWING SHOWS ONE TRAIN OF A TWO TRAIN SECTION. CAPACITY OF EACH TRAIN IS 50% OF UNIT DESIGN.
2. THIS DRAWING IS A SIMPLIFIED FLOW DIAGRAM OF A PROPRIETARY UNIT. STREAM CONFIGURATIONS AND/OR EQUIPMENT ARE NOT COMPLETELY REPRESENTED.
3. THE FLOW QUANTITIES, TEMPERATURES AND PRESSURES REFERENCED BY DIAMONDS ARE SHOWN ELSEWHERE.

FIGURE 4.6.1-14

FLUOR

D.P. HALVERSON
C.F. ABATAY
R. McCARTHY
R. LANG

PROCESS FLOW DIAGRAM
SULFUR RECOVERY-ADIP SECTION
UNIT 19

CROW TRIBE OF INDIANS — SYNFUELS FEASIBILITY STUDY

NONE | 835704-19-4-101 | 1

003 3571910

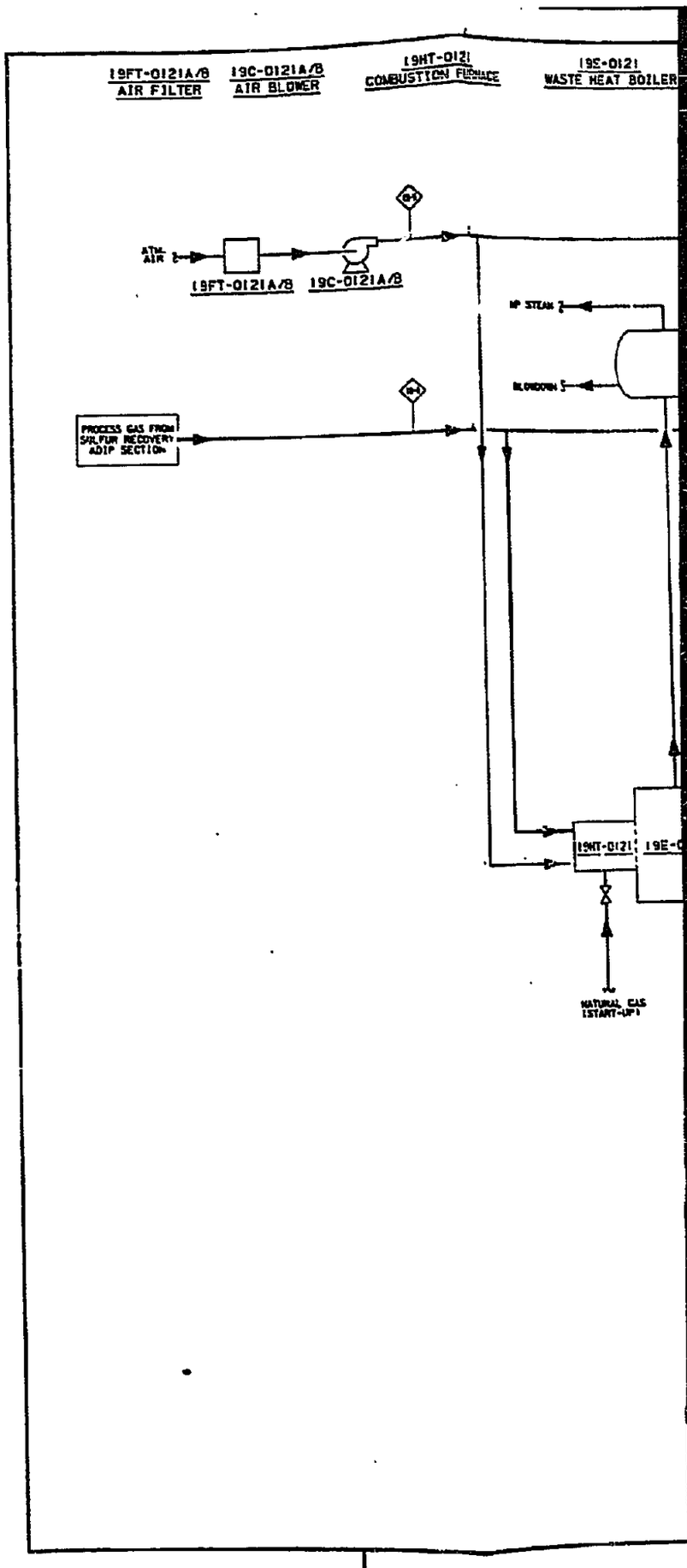
19FT-0121A/B
AIR FILTER
19C-0121A/B
AIR BLOWER
19HT-0121
COMBUSTION FURNACE
19S-0121
WASTE HEAT BOILER
ATM. AIR
19FT-0121A/B
19C-0121A/B
MP STEAM
BLOWDOWN
PROCESS GAS FROM SULFUR RECOVERY ADIP SECTION
19HT-0121
19E-
NATURAL GAS (START-UP)

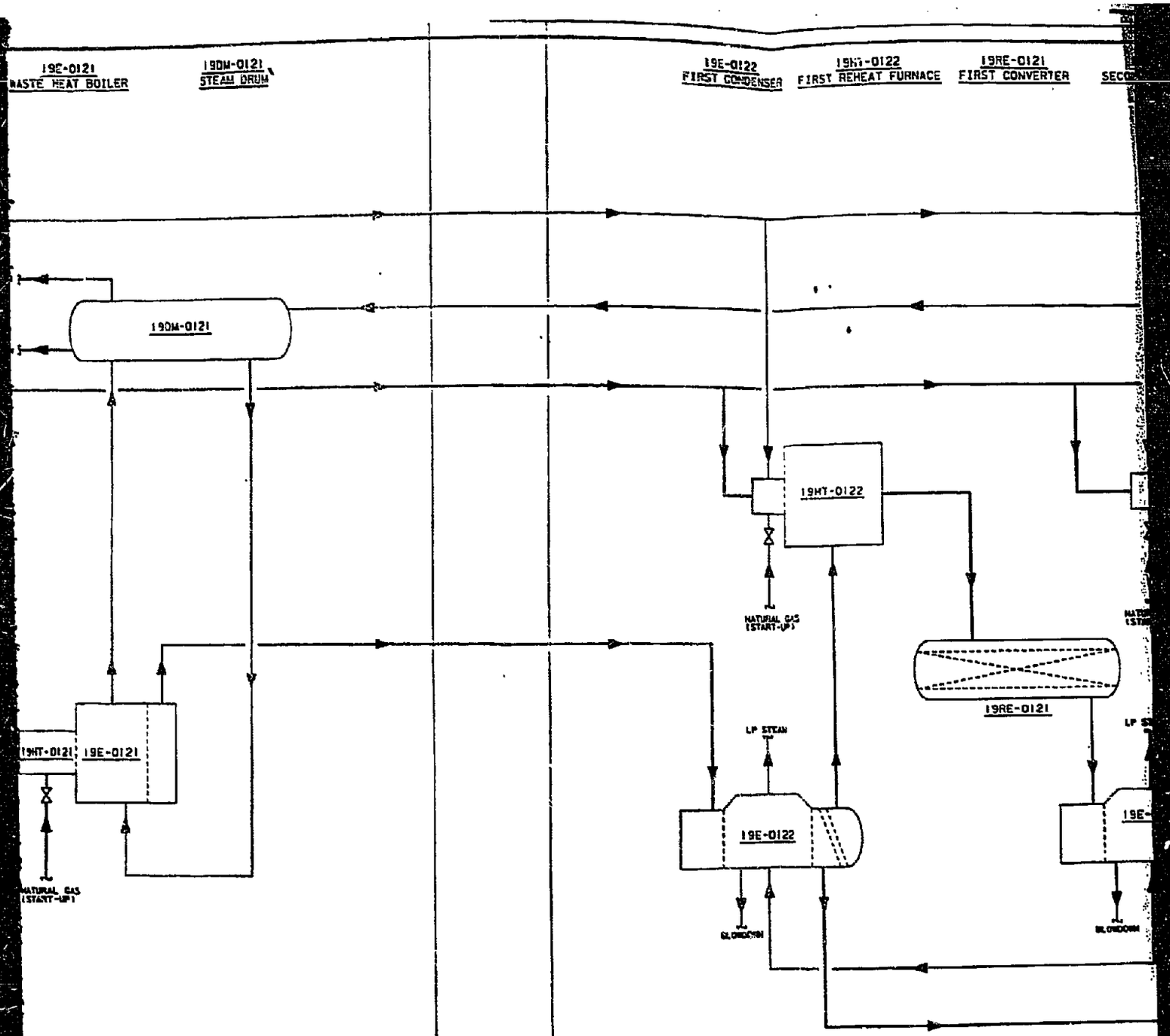

DRAWING NO.	REV.	FRAME
035704-19-R-102	1	2 OF 2

4 3

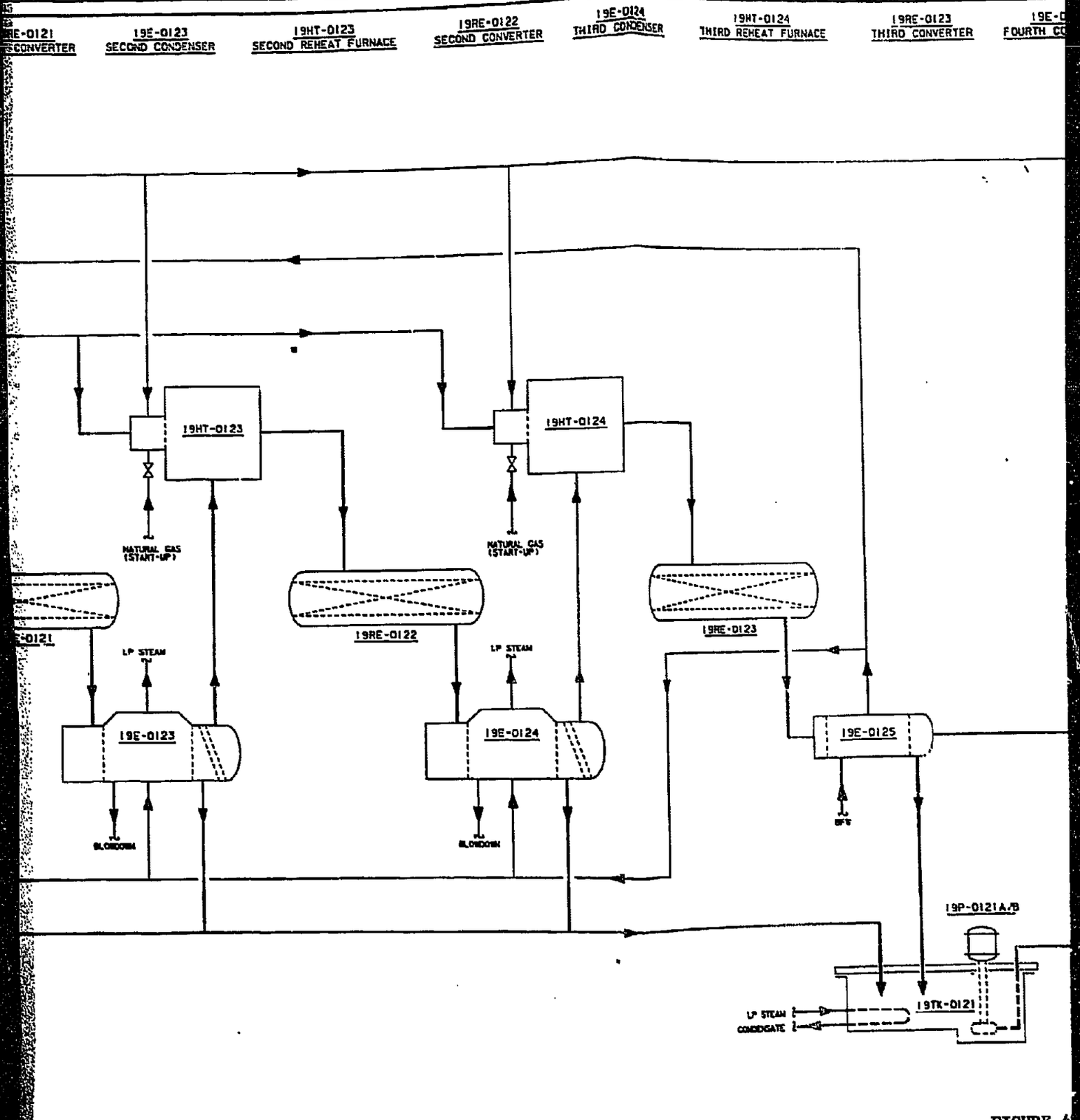

FIGURE 4

FLUOR

D. P. HALVERSON

2

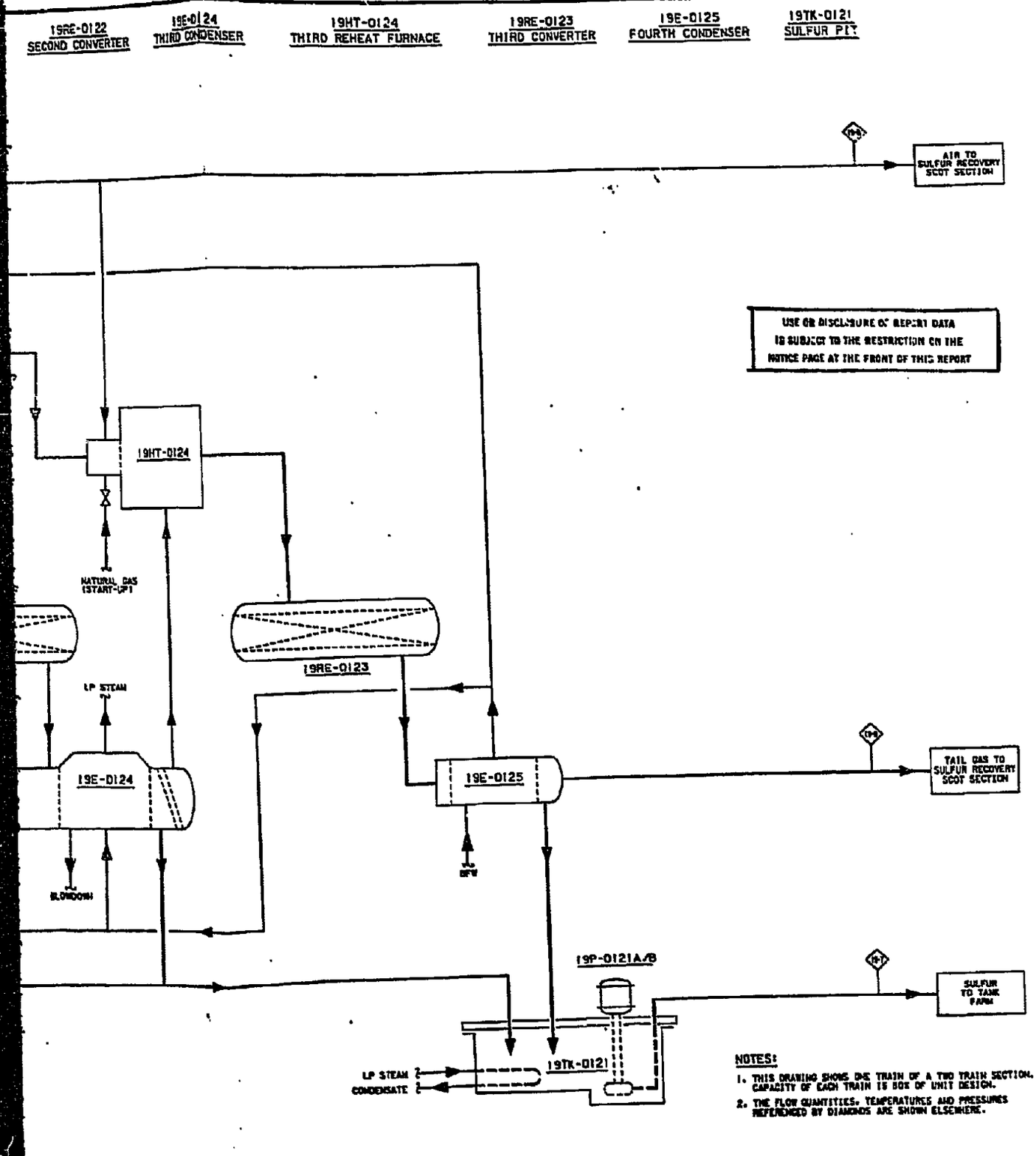

FIGURE 4.6.1-15

FLUOR

D.P. HALVERSON
C.C. AGATAY
R. O'BRIEN
R. McCARTHY
R. LAND

PROCESS FLOW DIAGRAM
SULFUR RECOVERY - CLAUS SECTION
UNIT 19

CROW TRIBE OF INDIANS
SYNFUELS FEASIBILITY STUDY

NONE
835704-19-R-102
MIRCOFILM FRAME 1 OF 2
1

003 3571910Z

2

19HT-0131
SCOT FURNACE

19RE-013
SCOT REACT

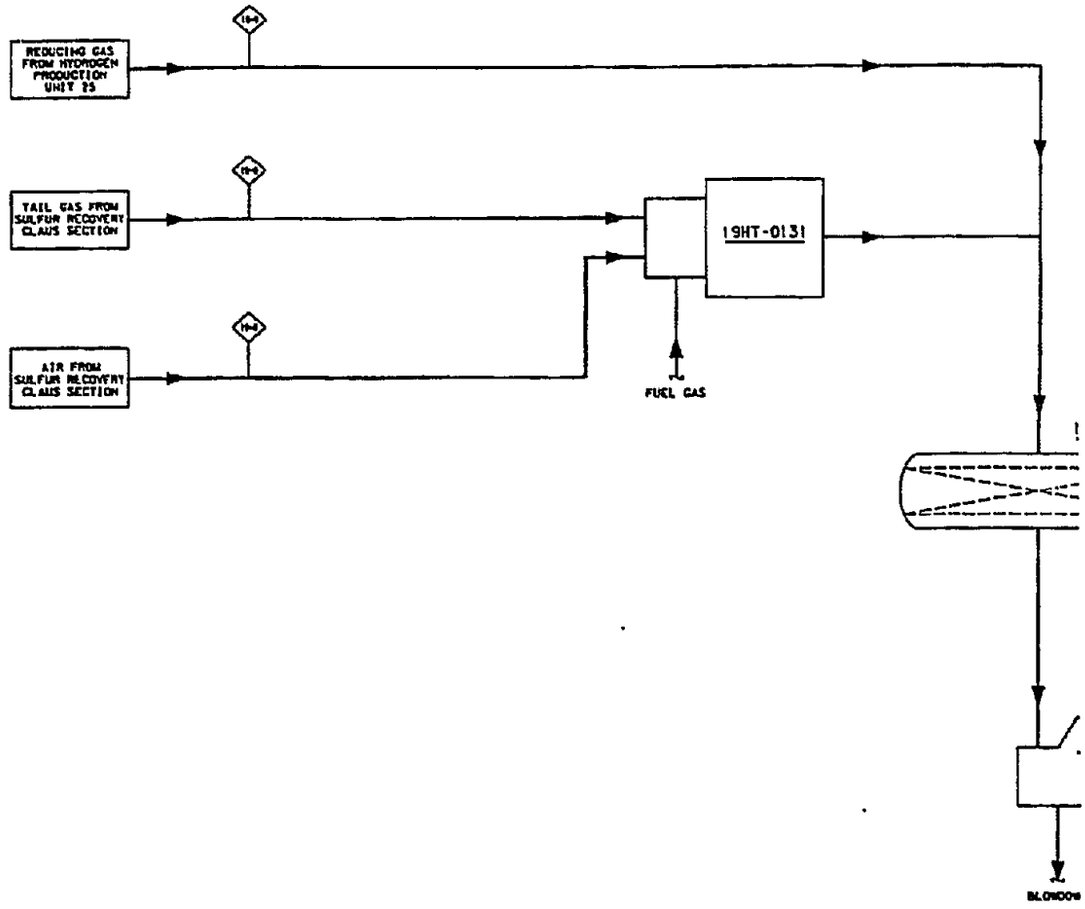

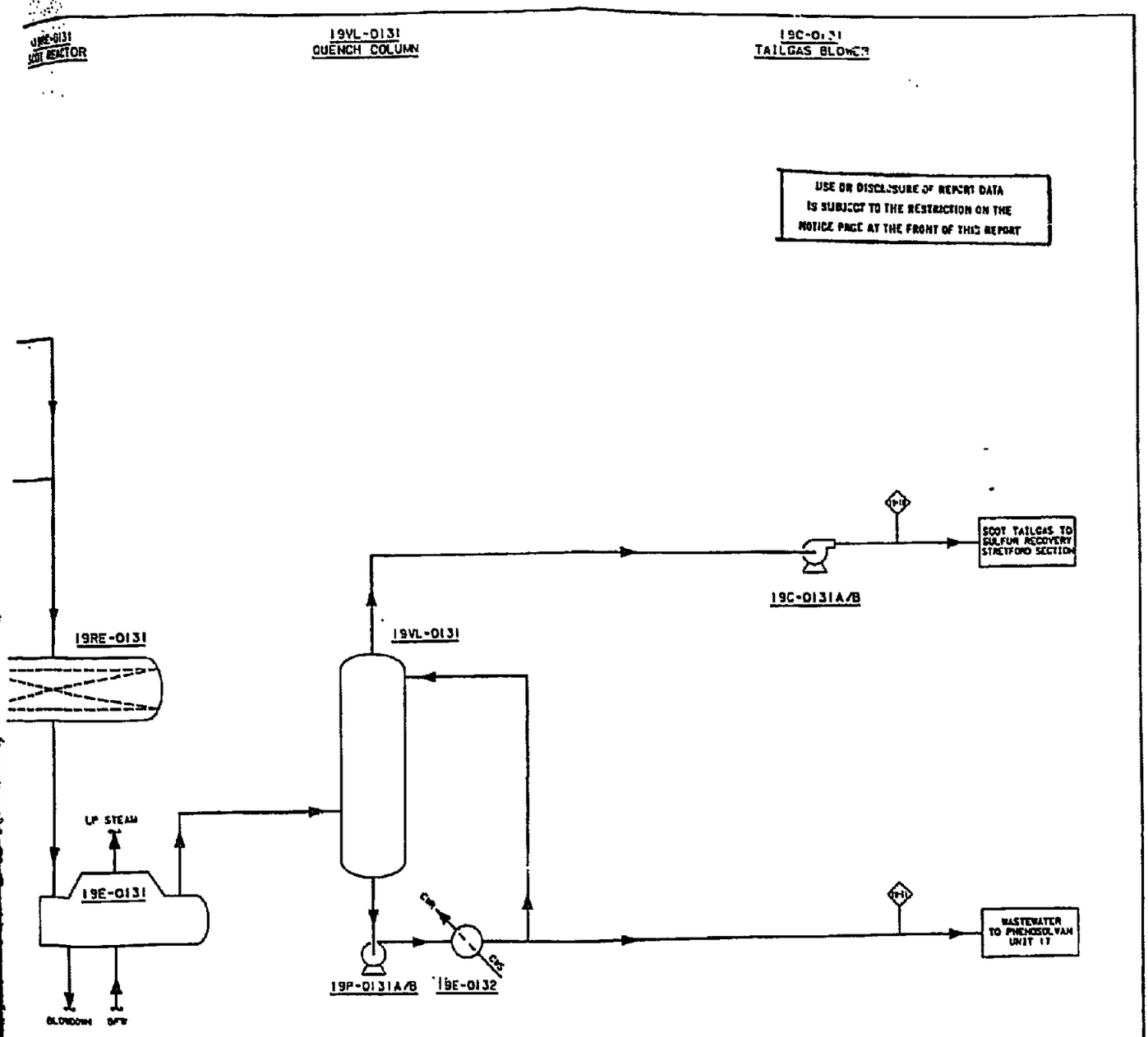

NOTES:

1. THIS DRAWING SHOWS ONE TRAIN OF A TWO TRAIN SECTION. CAPACITY OF EACH TRAIN IS 50% OF UNIT DESIGN.
2. THIS DRAWING IS A SIMPLIFIED FLOW DIAGRAM OF A PROPRIETARY UNIT. STREAM CONFIGURATIONS AND/OR EQUIPMENT ARE NOT COMPLETELY REPRESENTED.
3. THE FLOW QUANTITIES, TEMPERATURES AND PRESSURES REFERENCED BY DIAMONDS ARE SHOWN ELSEWHERE.

FIGURE 4.6.1-16

FLUOR	D.P. HALVERSON / D.C. ABATAY / W.D. BELMITO / R. McCARTHY / R. LANG	PROCESS FLOW DIAGRAM SULFUR RECOVERY-SCOT SECTION UNIT 19 CROW TRIBE OF INDIANS — SYNFUELS FEASIBILITY STUDY	33719103
		NONE — 835704-19-4-103 — 1	001

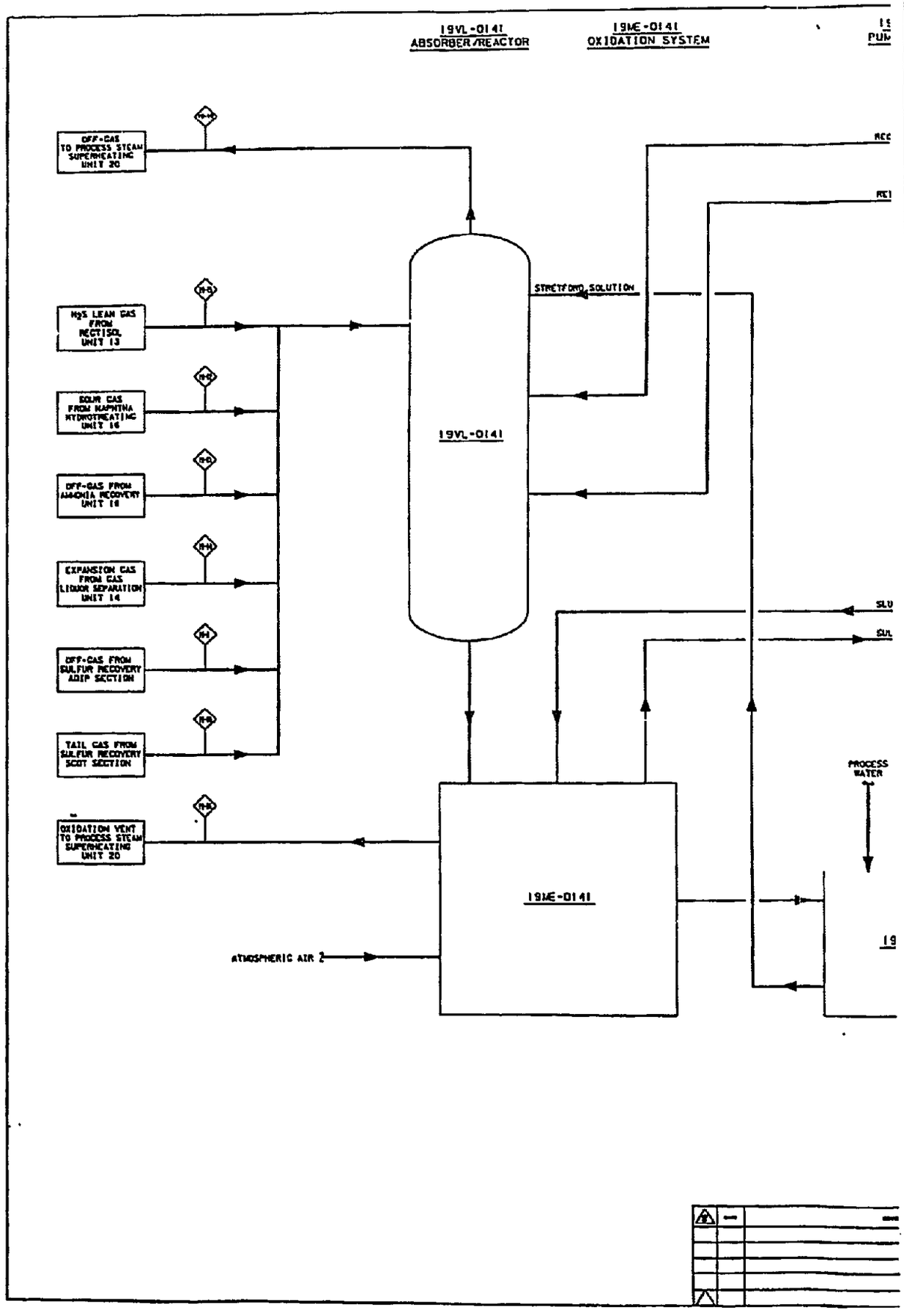
19VL-0141
ABSORBER/REACTOR
19ME-0141
OXIDATION SYSTEM
OFF-GAS TO PROCESS STEAM SUPERHEATING UNIT 20
H2S LEAN GAS FROM RECTISOL UNIT 13
SOUR GAS FROM NAPHTHA HYDROTREATING UNIT 16
OFF-GAS FROM AMMONIA RECOVERY UNIT 18
EXPANSION GAS FROM GAS LIQUOR SEPARATION UNIT 14
OFF-GAS FROM SULFUR RECOVERY ADIP SECTION
TAIL GAS FROM SULFUR RECOVERY SCOT SECTION
OXIDATION VENT TO PROCESS STEAM SUPERHEATING UNIT 20
STRETFORD SOLUTION
19VL-0141
19ME-0141
PROCESS WATER
ATMOSPHERIC AIR

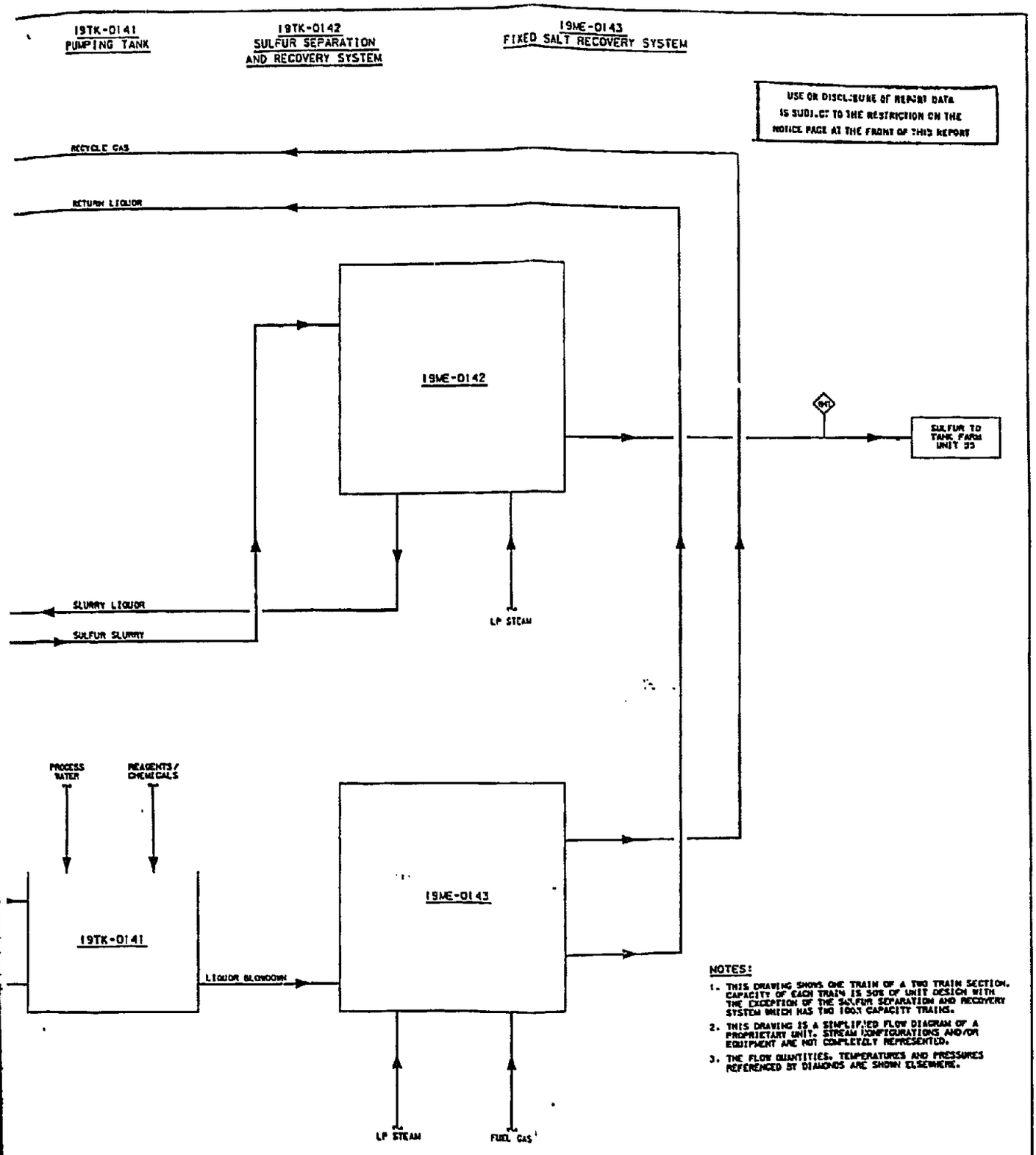

NOTES:

1. THIS DRAWING SHOWS ONE TRAIN OF A TWO TRAIN SECTION. CAPACITY OF EACH TRAIN IS 50% OF UNIT DESIGN WITH THE EXCEPTION OF THE SULFUR SEPARATION AND RECOVERY SYSTEM WHICH HAS TWO 100% CAPACITY TRAINS.
2. THIS DRAWING IS A SIMPLIFIED FLOW DIAGRAM OF A PROPRIETARY UNIT. STREAM CONFIGURATIONS AND/OR EQUIPMENT ARE NOT COMPLETELY REPRESENTED.
3. THE FLOW QUANTITIES, TEMPERATURES AND PRESSURES REFERENCED BY DIAMONDS ARE SHOWN ELSEWHERE.

FIGURE 4.6.1-17

FLUOR

D.P. HALVERSON
C.C. ABATAY
R.O'BRIMITO
R. McCARTHY
R. LANG

PROCESS FLOW DIAGRAM
SULFUR RECOVERY-STRETFORD SECTION
UNIT 19

CROW TRIBE OF INDIANS — SYNFUELS FEASIBILITY STUDY

NONE | 835704-19-4-104 | 1

003 35719104

portion of the original input stream. The combined stream is then passed through a series of three reheater (19HT-0122, 19HT-0123, and 19HT-0124 in Figure 4.6.1-15) and catalytic converter stages (19RE-0121, 19RE-0122, and 19RE-0123) stages to recover about 93 percent of the sulfur that entered the Claus unit in the original feed stream. The tail gas stream then enters the SCOT section of the process as illustrated in Figure 4.6.1-15. Typical gas composition for the feed stream and tail gas stream for typical operating temperatures and pressures, and employing a split-flow mode Claus unit, are presented in Table 4.6.1-14.

SCOT Section. The Claus plant tail gas is combined with air from the sulfur recovery stream from the Claus unit and hydrogen reducing gas, from the H_2 production unit (25) within the plant and heated in the SCOT section furnace (19HT-0131) as shown in Figure 4.6.1-16. The exit gas from the SCOT furnace then enters the SCOT reactor (19RE-0131 in Figure 4.6.1-16) where catalytic reduction of the sulfur species to H_2S is effected by means of a cobalt/molybdate catalyst followed by removal and recovery of the H_2S in an alkanolamine (typically diisopropanolamine) scrubbing system (Quench Column, 19VL-0131 in Figure 4.6.1-16). The SCOT tailgas is then sent to the sulfury recovery section of the Stretford unit.

Stretford Unit. A total of six gas streams are processed through the Stretford unit prior to entering the vent gas incinerator (process steam superheating) and subsequent gaseous emission from the coal gasification plant to the ambient atmosphere. The aforementioned gas streams include the following: H_2S lean gas from the Rectisol unit, sour gas from the Naptha Hydrotreating unit, off gas from ammonia recovery, expansion gas from the Gas Liquor Separation unit, off gas from sulfur recovery within the ADIP section and tail gas from sulfur recovery within the SCOT section, as shown in the process flow diagram for the Stretford unit, Figure 4.6.1-17.

The combined raw gas stream is contacted countercurrently with the "Stretford solution," an aqueous solution of ADA (anthraquinone disulfonic acid), vanadium, anhydrous citric acid, and sodium carbonate. H_2S in the gas is oxidized to elemental

TABLE 4.6.1-14

SPLIT FLOW MODE CLAUS FEED AND TAIL GAS DATA[a]

Component	Feed Stream Stream 1 Mole %	Tail Gas Stream Stream 3 Mole%
COS	—	0.09
H_2S	19.72	0.26
SO_2	—	0.10
CO_2	78.68	65.04
N_2	0.56	34.34
C_1	0.66	—
C_2	0.12	0.19
C_3	0.08	0.03
C_4	0.18	—
C_4^+	—	—
Temperature	313°K (105°F)	805°K (990°F)
Pressure	0.16 MPa (8.1 psig)	0.10 MPa (0.1 psig)

[a]Data were selected to represent Claus performance on low-H_2S, high-CO_2 gases which would be encountered in coal gasification applications.

Source: Draft Standards Support and Environmental Impact Statement. Volume I: Proposed Standards of Performance for Lurgi Coal Gasification Plants, EPA, November 1976.

sulfur by the vanadic salt while the salt is reduced to vanadous form.

The reactions involved are:

$$H_2S + Na_2CO_3 \rightleftharpoons NaHS + NaHCO_3$$

in the absorber and

$$4NaVO_3 + 2NaHS + 2H_2O \rightleftharpoons Na_2V_4O_9 + 2S + 4NaOH$$

and

$$Na_2V_4O_9 + 2NaOH + H_2O + 2ADA \rightleftharpoons 4NaVO_3 + 2ADA \text{ (reduced)}$$

in the holding tank. The reduced liquor flows to the oxidizers (19VL-0141 in Figure 4.6.1-17) where the vanadium is restored to the vanadic form by a redox reaction with the ADA. Air is blown through the oxidizers to reoxidize the ADA and separate the sulfur by froth flotation. This reaction is:

$$2ADA \text{ (reduced)} + O_2 \rightleftharpoons 2ADA + H_2O \quad .$$

The sulfur float is sent to a centrifuge and separator where the product sulfur (99.5 percent purity) is obtained. Side reactions involving HCN and other (than H_2S) sulfur and nitrogen compounds require that a portion of the solution be blown down to prevent buildup of these contaminants.

Process Steam Superheating (Vent Gas Incinerator). The exit gas from the Stretford unit, containing approximately 1.4 weight percent sulfur, enters the process steam superheating unit or vent gas incinerator where the remaining sulfur is oxidized to SO_2. As previously noted in Tables 4.6.1-8 and 4.6.1-9, air emissions data for the selected design scenarios employing the Westmoreland and Shell coal feeds, respectively, the vent gas incinerators also incorporate special burners to limit NO_x and hydrocarbon gaseous emissions from the Lurgi gasification process as previously

demonstrated in Table 4.4.1-1, Section 4.5.1. Summarily, the aforementioned SO_2 emission control devices result in high SO_2 emission control efficiencies of 98.7 percent or greater for both coal feeds and all design scenarios analyzed in the feasibility study. Thus, it is concluded that BACT for the Lurgi coal gasification units will effect excellent mitigation of potential gaseous emissions of the major pollutants. The mitigation measures to reduce NO_x and particulate emissions also drastically reduce the potential adverse impacts from visibility impairment since these two pollutants are the major contributors to visibility degradation from coal combustion process plants.

4.6.2 Water Resources Impact Assessment

Potential water-related environmental impacts to the Crow Reservation due to the operation of the proposed coal gasification facility may be related to impacts associated with possible disturbance to both quantity and quality of the water resource within reservation boundaries.

4.6.2.1 Water Quantity

Although the final process design for this feasibility study is based upon a SNG production rate of 125 MM SCF/D, the water requirements for the facility must ultimately be prefaced upon upgrading the plant to the 250 MM SCF/D SNG production rate. For the higher SNG production rate, plant water requirements dictate a firm plant supply flow rate of 14,000 gpm (31 cfs). Since the Yellowtail Reservoir (Bighorn Lake) and the Bighorn River currently constitute the only regulated supply of water on the reservation that will satisfy the design requirements on a continuing basis, the withdrawal of approximately 20,500 ac-ft/yr (332 plant operating days per calendar year) represents the only potential environmental impact from the operation of the proposed coal gasification plant on the surface water and groundwater resources with respect to overall reservation water budget or inventories at any of the proposed candidate siting areas.

The other major drainages on the Crow Reservation—the Little Bighorn River and Pryor Creek—are presently unregulated and, hence, could not meet the plant requirements during the minimum or low natural discharge rates occurring on a yearly seasonal basis (discussed earlier in the environmental baseline description of the water resources in Section 4.1.3).

4.6.2.2 Water Quality Impacts Assessment

Potential adverse water quality impacts to the Crow Reservation and the surrounding environs from the operation of the proposed Crow synfuels plant are closely interrelated to the properly implemented mitigation of the liquids and solids process waste residues. As previously inferred, the engineering design of the facility is predicated upon zero liquid discharge; i.e., having no direct discharge of liquid waste effluents to surface waters or groundwaters within the areas of the two selected candidate sites, Site 1 and Site 23. Hence, the major mitigation measures to preclude potential water quality impacts evolve quite naturally around the basic design of the process water management system regardless of the siting area as shown in the block flow diagram in Figure 4.6.2-1 and as discussed in greater detail in Volume II of this report. It must be emphasized that the process design details shown for the water management system are representative of the base case design for a production rate of 125 MM SCF/D SNG. The capability of water soluble ions or compounds to migrate or be transported externally from the immediate area of the plant site is dependent on (1) their increased mobility in the liquid (aqueous) state and (2) a continuous transport linkage, the liquid pathway in this instance, to an area of potential environmental impact.

Therefore, the ancillary containment features incorporated into the design of the external liquid-solid and solid process waste effluents constitute the primary mitigation measure necessary to prevent liquid contaminant migration into either surface waters or groundwaters. Thus the design philosophy of mitigation by containment either eliminates or minimizes one of the two conditions necessary to produce the contaminant transfer mechanism.

All water and process liquid waste effluents for the Crow synfuels plant are stored in a series of ponds located within the completely fenced plant siting areas as shown in Figures 4.6.2-2 and 4.6.2-3 for candidate sites 1 and 23, respectively. The details of the pond construction pertinent to the postulated liquid containment design approach are summarized in Table 4.6.2-1. The pond lining system details are illustrated in Figures 4.6.2-4 through 4.6.2-8.

The largest of the ponds (about 48 acres) in Table 4.6.2-1 and the recipient of the majority of potentially hazardous process liquid waste effluents, the solar evaporation pond, has the lining system shown as "Detail D" in Figure 4.6.2-5. The 100 mil high density polyethylene (HDPE) inner lining is followed by a 6-in. (minimum) thick drainage course, an additional 18-in. thick compacted clay liner and, finally, a compacted subgrade. Thus, the evaporation pond lining system incorporates, effectively, a multilayer containment barrier composed of relatively impervious lining materials, HDPE, and clay.

The other smaller repositories of possibly hazardous liquid waste effluents are outlined in Table 4.6.2-1. The wastewater equalization pond, the treated effluent pond, the diversion box and pond, and the oily stormwater pond also incorporate the foregoing lining system design.

Additional mitigation measures incorporated in the pond design include design provisions for adequate freeboard and pond embankment side slope to preclude potential surface runoff of the stored liquid waste effluents as a consequence of inadvertent natural occurrences such as tornadoes, heavy storms, or floods. The evaporation pond, for example, has a designated freeboard of 4 feet and a pond embankment slope of 3:1 as presented in Table 4.6.2-1 and Figures 4.6.2-7 and 4.6.2-8.

Provisions for leakage detection are also included in pond design for all the aforementioned possibly hazardous liquid waste storage repositories if the integrity of the lining system should be circumvented for any reason. Typical leakage detection details for the ponds, shown in Figure 4.6.2-6, would afford the plant

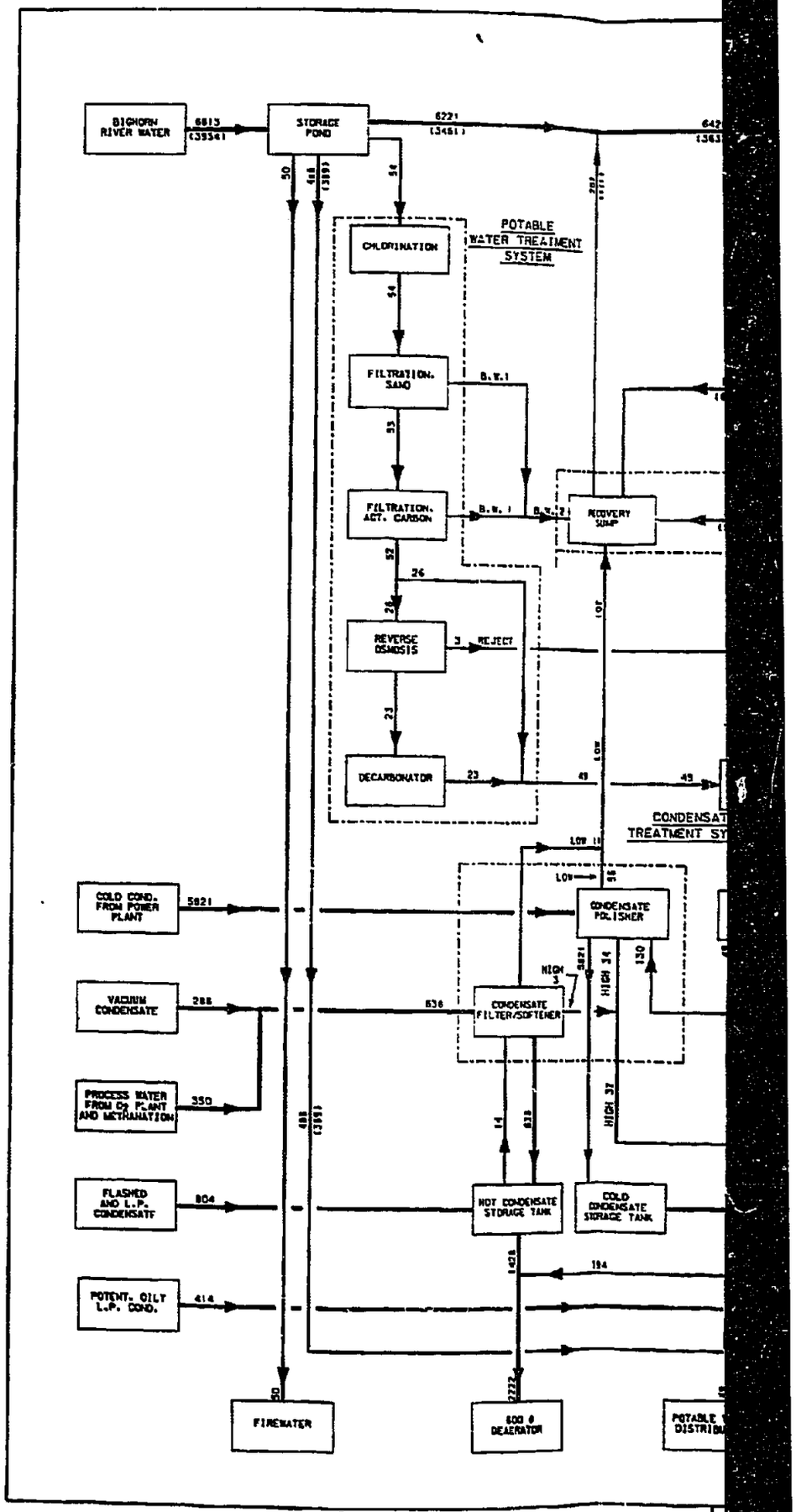
BIGHORN RIVER WATER
6813
(39541)
STORAGE POND
6221
(3481)
POTABLE WATER TREATMENT SYSTEM
CHLORINATION
FILTRATION, SAND
B.W.1
FILTRATION, ACT. CARBON
B.W.1
B.W.2
RECOVERY SUMP
REVERSE OSMOSIS
3
REJECT
DECARBONATOR
23
49
CONDENSAT
TREATMENT SY
COLD COND. FROM POWER PLANT
5821
CONDENSATE POLISHER
VACUUM CONDENSATE
288
636
CONDENSATE FILTER/SOFTENER
PROCESS WATER FROM CO2 PLANT AND METHANATION
350
FLASHED AND L.P. CONDENSATE
804
HOT CONDENSATE STORAGE TANK
COLD CONDENSATE STORAGE TANK
194
POTENT. OILY L.P. COND.
414
FIREWATER
600 # DEAERATOR
POTABLE
DISTRIBU

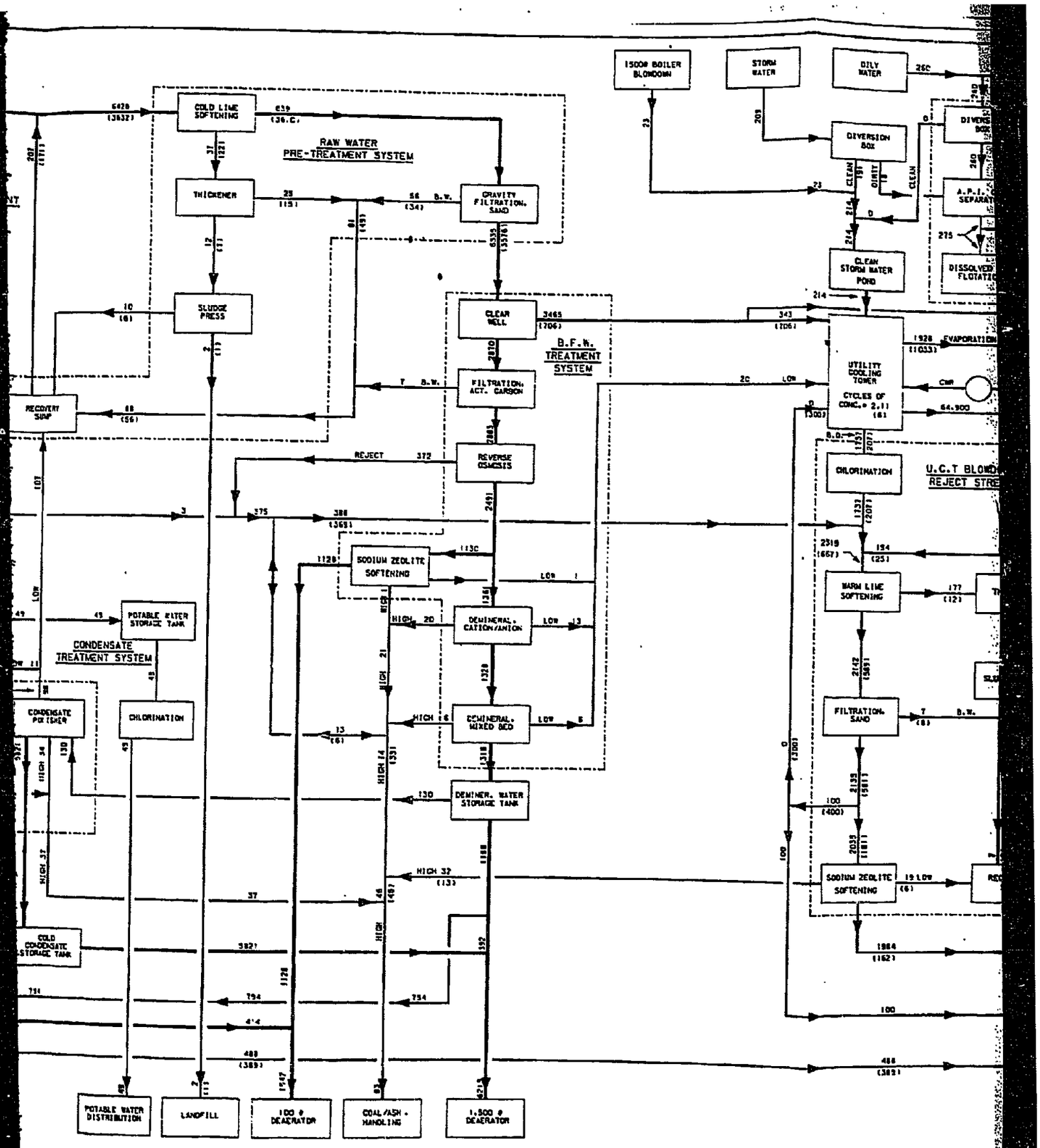
COLD LIME SOFTENING
RAW WATER PRE-TREATMENT SYSTEM
THICKENER
GRAVITY FILTRATION, SAND
SLUDGE PRESS
RECOVERY SUMP
CLEAR WELL
B.F.W. TREATMENT SYSTEM
FILTRATION, ACT. CARBON
REVERSE OSMOSIS
REJECT
SODIUM ZEOLITE SOFTENING
DEMINERAL. CATION/ANION
DEMINERAL. MIXED BED
DEMINER. WATER STORAGE TANK
POTABLE WATER STORAGE TANK
CONDENSATE TREATMENT SYSTEM
CONDENSATE POLISHER
CHLORINATION
COLD CONDENSATE STORAGE TANK
POTABLE WATER DISTRIBUTION
LANDFILL
100 # DEAERATOR
COAL/ASH HANDLING
1,500 # DEAERATOR
1500# BOILER BLOWDOWN
STORM WATER
OILY WATER
DIVERSION BOX
A.P.I. SEPARATOR
CLEAN STORM WATER POND
DISSOLVED FLOTATION
UTILITY COOLING TOWER
CYCLES OF CONC. = 2.1
EVAPORATION
CHLORINATION
U.C.T BLOWDOWN REJECT STREAM
WARM LIME SOFTENING
FILTRATION, SAND
SODIUM ZEOLITE SOFTENING

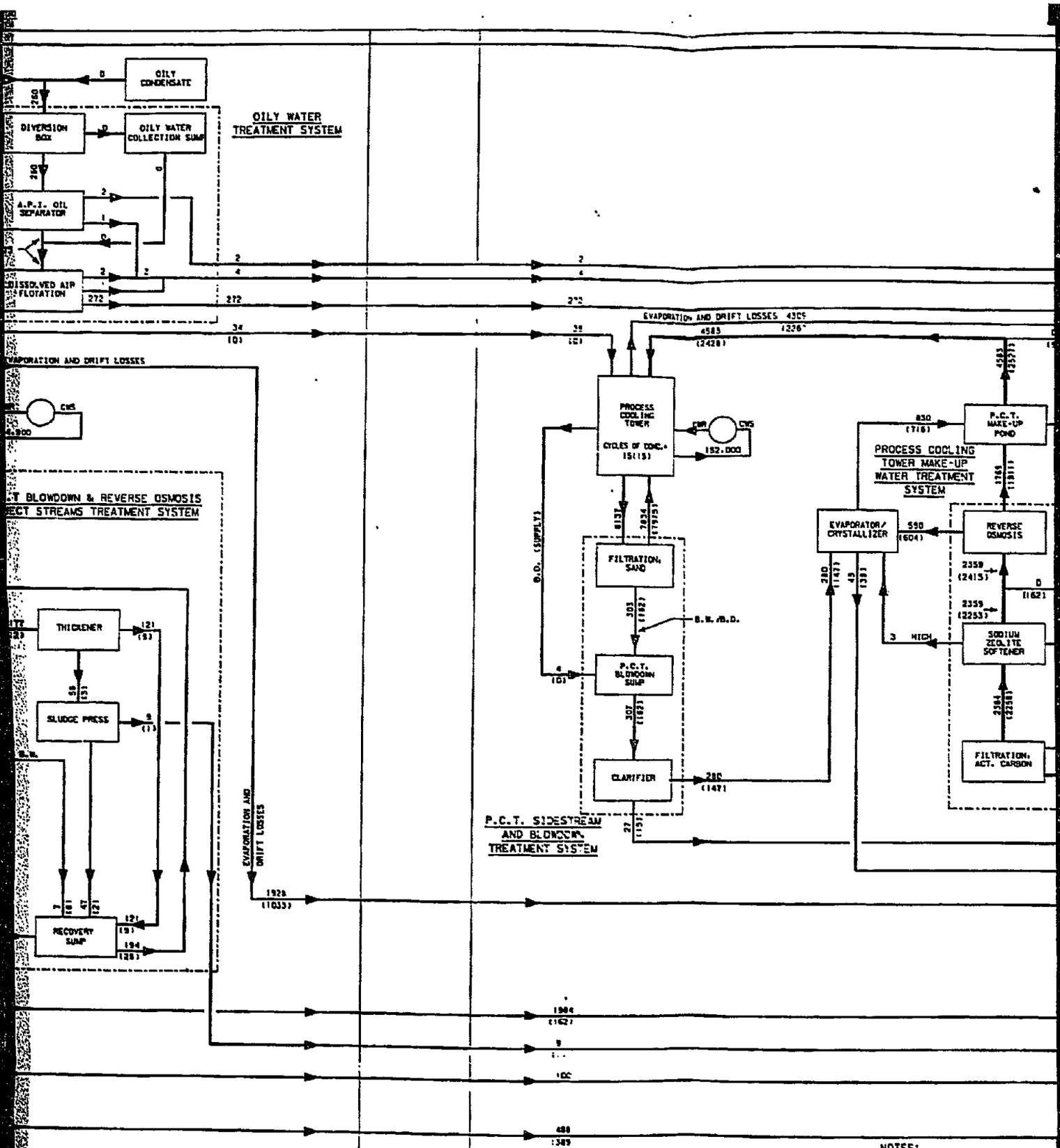

NOTES:

1. ALL FLOW RATES IN GALLONS
2. NUMBERS WITHOUT PARENTHESES
NUMBERS INSIDE PARENTHESES
DIFFERENT FROM SUMMERTIME
3. REVERSE OSMOSIS INCLUDES
4. HIGH IS FOR HIGH TDS WASTE.
5. B.W. IS FOR BACKWASH.
6. B.D. IS FOR BLOWDOWN.
7. DURING WINTER, 160 GPM OF
WATER HOLDING POND FOR 10

DRAWING NO.	REV.	FRAME
835704-00-R-102	1	2 OF 2

4

3

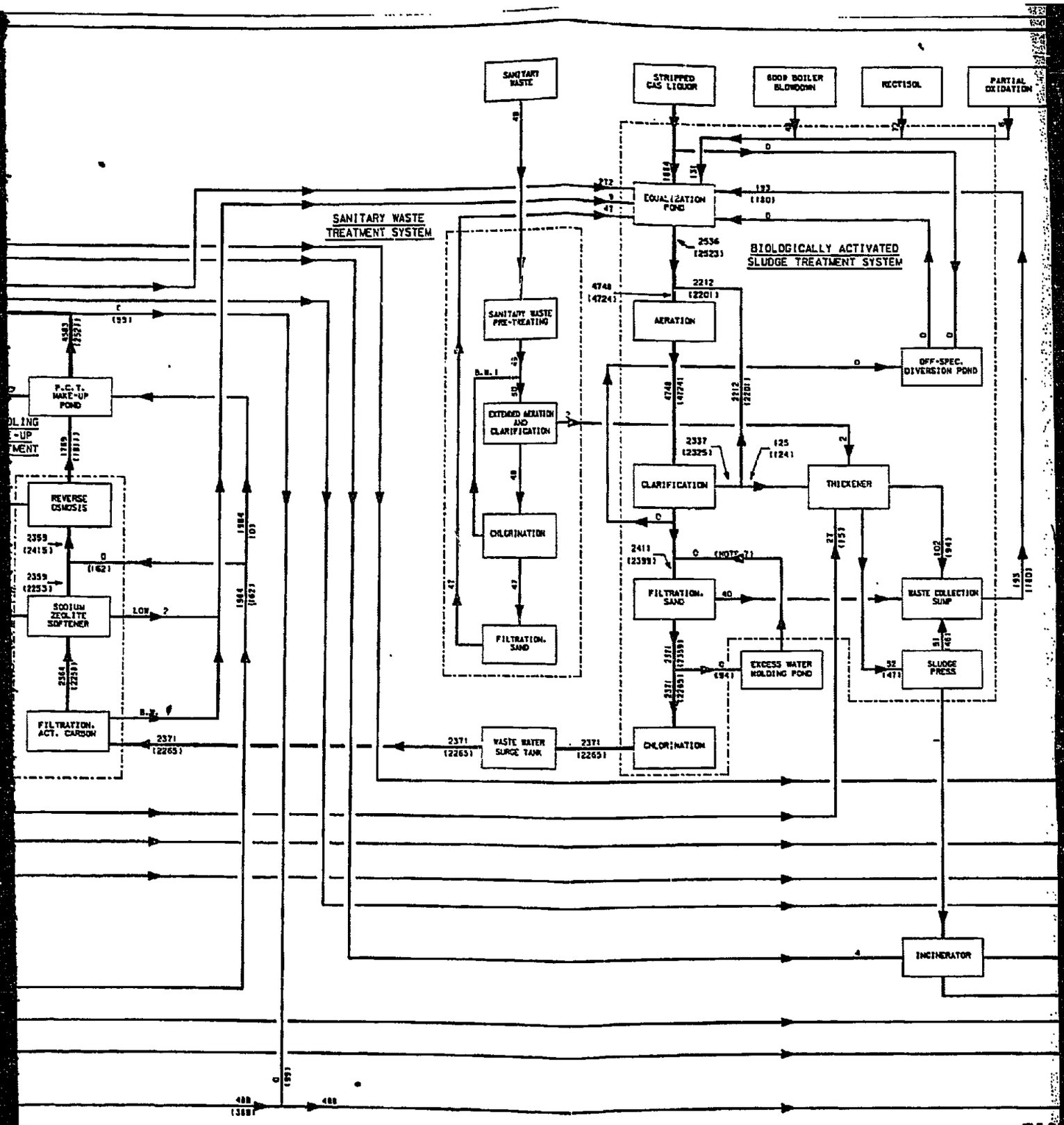

W RATES IN GALLONS PER MINUTE.
WITHOUT PARENTHESES ARE FOR SUMMERTIME CASE;
INSIDE PARENTHESES ARE FOR WINTERTIME CASE IF
NT FROM SUMMERTIME CASE.
OSMOSIS INCLUDES MICRON FILTRATION.
FOR HIGH TDS WASTE. LOW IS FOR LOW TDS WASTE.
FOR BACKWASH.
FOR BLOWDOWN.
WINTER. 160 GPM OF WATER IS STORED IN THE EXCESS
OLDING POND FOR 10 DAYS FOR LATER USAGE.

FLUOR

R. WHITE

CASE

CROW T

NO

FIG

2

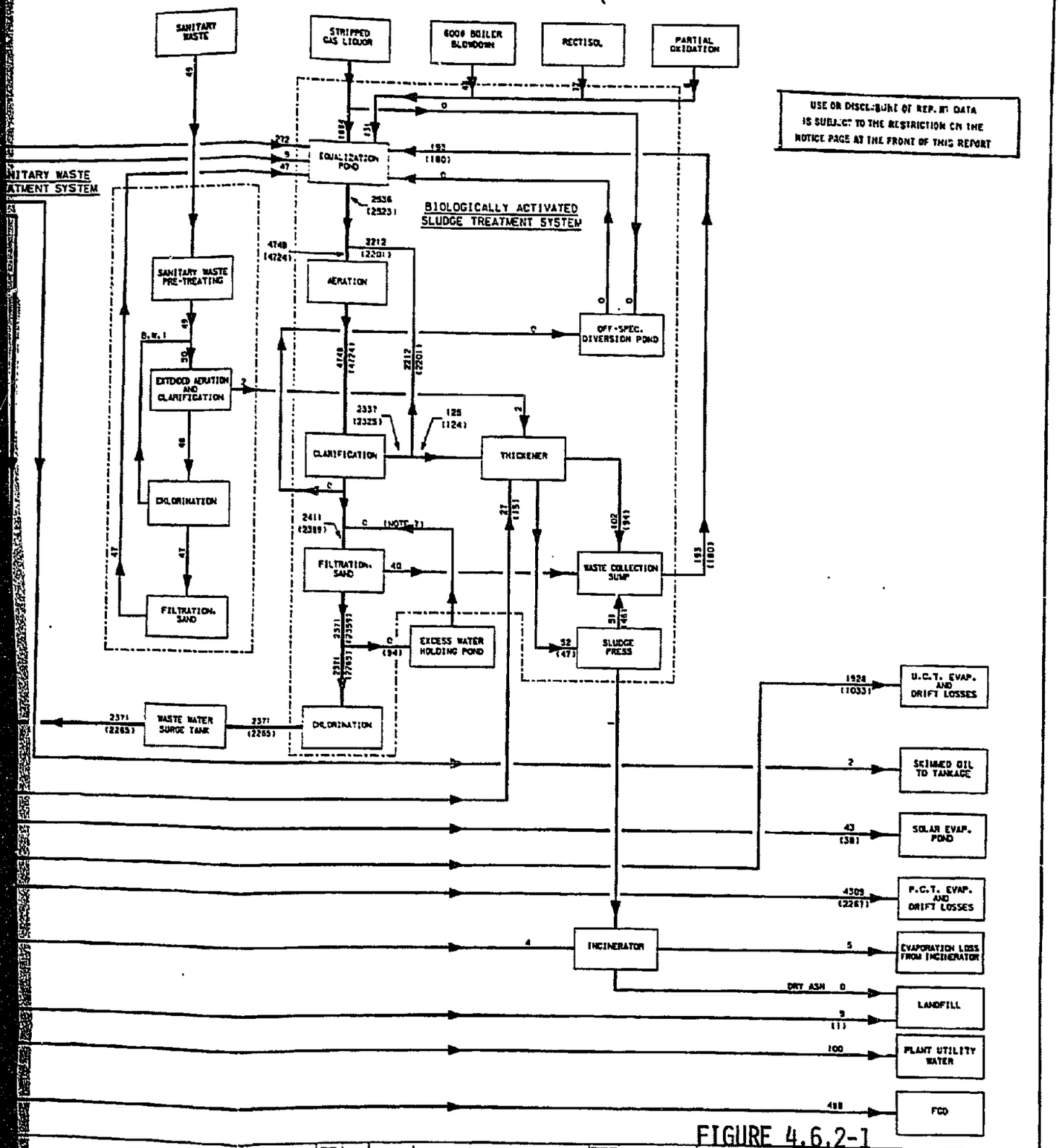

FIGURE 4.6.2-1

FLUOR

BLOCK FLOW DIAGRAM
PLANT WATER BALANCE
CASE: WESTMORELAND COAL - 40% FINES - SNG
CROW TRIBE OF INDIANS
SYNFUELS FEASIBILITY STUDY

NONE

835704-00-R-102

MICROFILM FRAME 1 OF 2

2

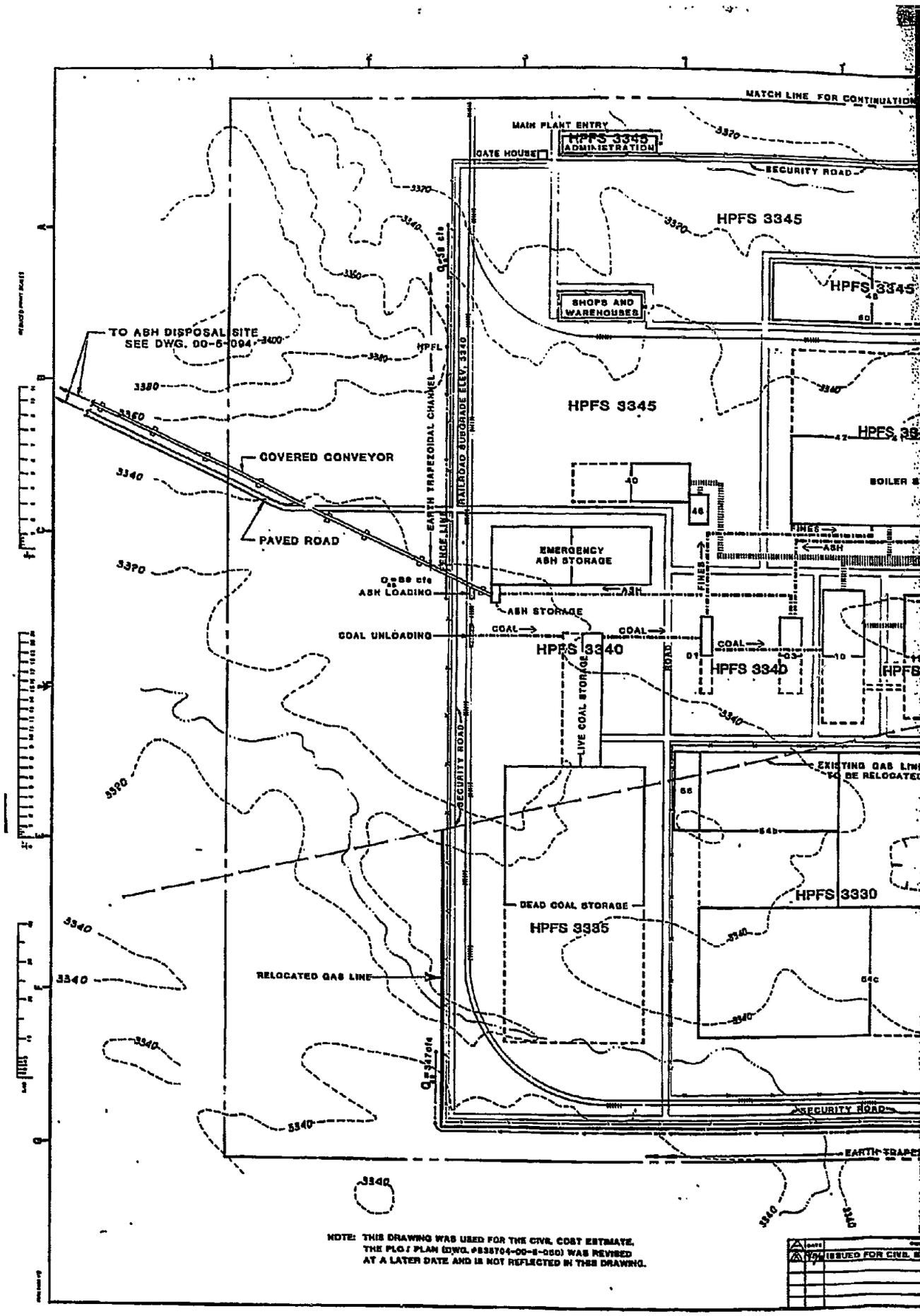
MATCH LINE FOR CONTINUATION
MAIN PLANT ENTRY
HPFS 3345
ADMINISTRATION
GATE HOUSE
SECURITY ROAD
HPFS 3345
HPFS 3345
SHOPS AND WAREHOUSES
TO ASH DISPOSAL SITE
SEE DWG. 00-6-094
HPFL
HPFS 3345
COVERED CONVEYOR
PAVED ROAD
EARTH TRAPEZOIDAL CHANNEL
RAILROAD SUBGRADE ELEV. 3340
FENCE LINE
EMERGENCY ASH STORAGE
ASH LOADING
ASH STORAGE
ASH
FINES
COAL UNLOADING
COAL
HPFS 3340
LIVE COAL STORAGE
ROAD
HPFS 3340
BOILER
EXISTING GAS LINE TO BE RELOCATED
DEAD COAL STORAGE
HPFS 3335
HPFS 3330
RELOCATED GAS LINE
SECURITY ROAD
EARTH TRAPEZ
3370
3360
3350
3340
3380
3400
3320
NOTE: THIS DRAWING WAS USED FOR THE CIVIL COST ESTIMATE.
THE PLOT PLAN (DWG. #838704-00-6-050) WAS REVISED
AT A LATER DATE AND IS NOT REFLECTED IN THIS DRAWING.
ISSUED FOR CIVIL

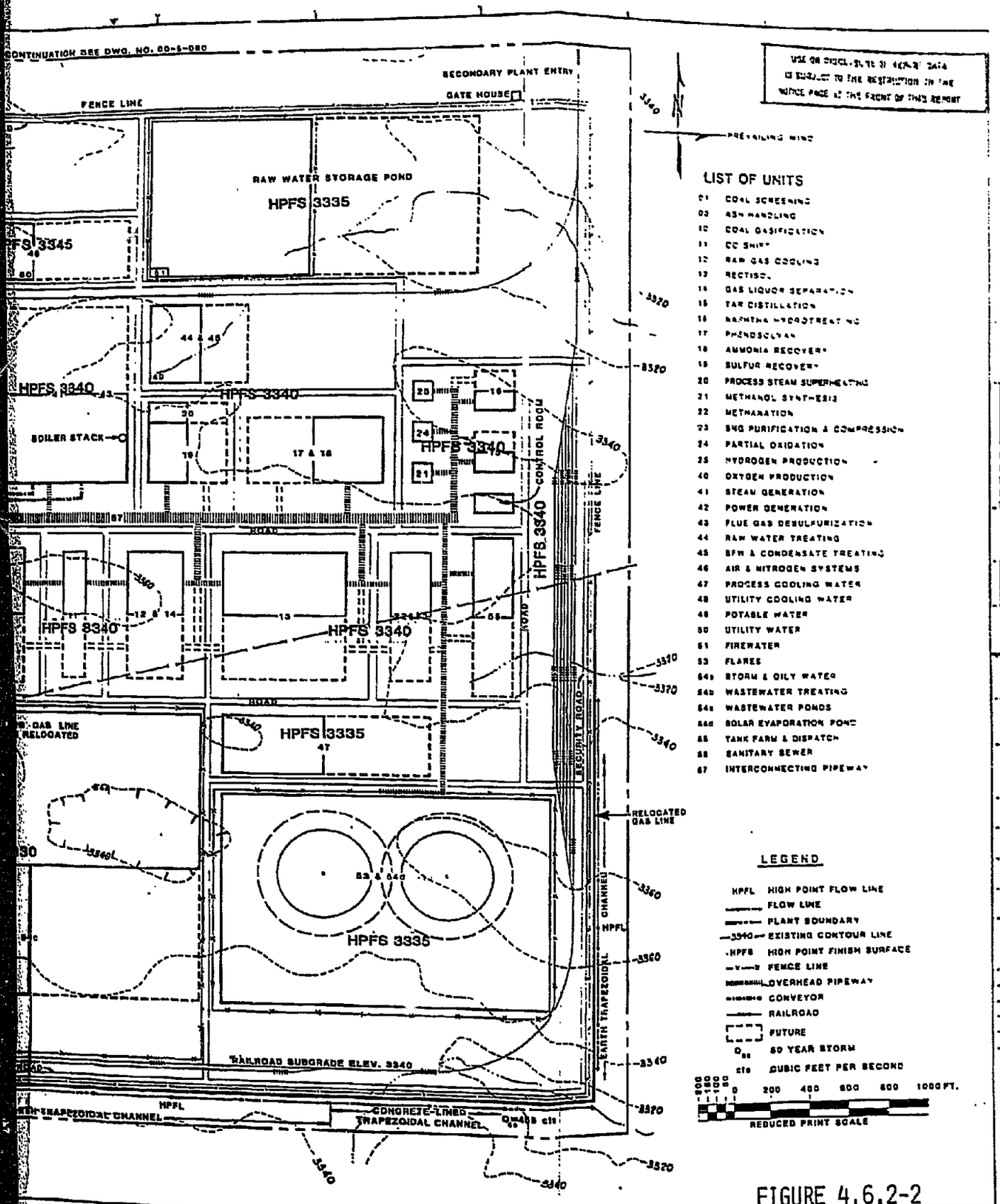

FIGURE 4.6.2-2

FOR CIVIL ESTIMATE

00-S-080 PLOT PLAN
00-S-080 VICINITY MAP

FLUOR

SITE #1 SITE PREPARATION
OFF-SITE DRAINAGE, GRADING, & RELOCATION PLAN
SYNFUELS FEASIBILITY STUDY
CROW TRIBE OF INDIANS MONTANA
1" = 200' 835704-00-S-083 A

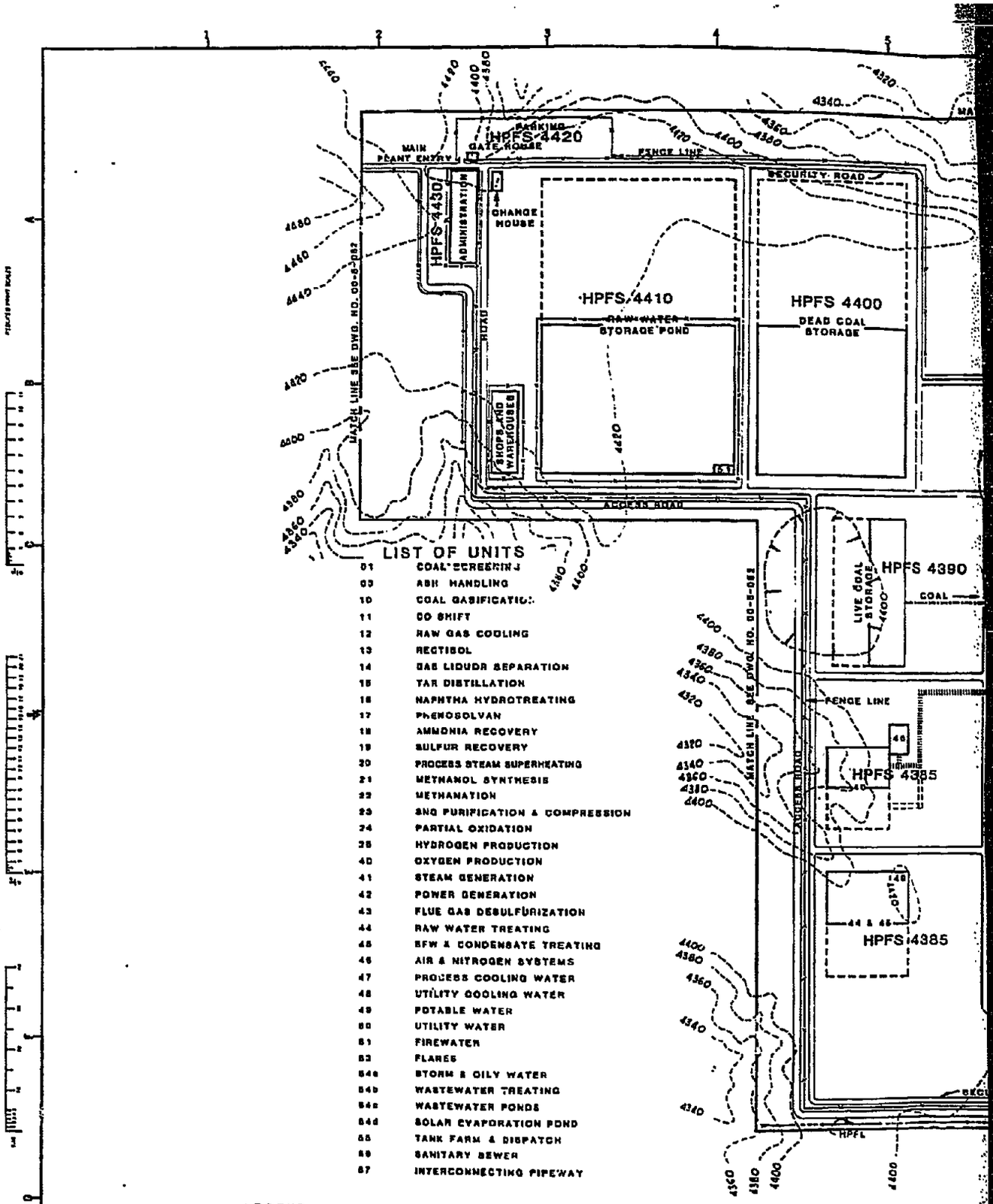

LIST OF UNITS

01	COAL SCREENING
03	ASH HANDLING
10	COAL GASIFICATION
11	CO SHIFT
12	RAW GAS COOLING
13	RECTISOL
14	GAS LIQUOR SEPARATION
15	TAR DISTILLATION
16	NAPHTHA HYDROTREATING
17	PHENOSOLVAN
18	AMMONIA RECOVERY
19	SULFUR RECOVERY
20	PROCESS STEAM SUPERHEATING
21	METHANOL SYNTHESIS
22	METHANATION
23	SNG PURIFICATION & COMPRESSION
24	PARTIAL OXIDATION
25	HYDROGEN PRODUCTION
40	OXYGEN PRODUCTION
41	STEAM GENERATION
42	POWER GENERATION
43	FLUE GAS DESULFURIZATION
44	RAW WATER TREATING
45	BFW & CONDENSATE TREATING
46	AIR & NITROGEN SYSTEMS
47	PROCESS COOLING WATER
48	UTILITY COOLING WATER
49	POTABLE WATER
50	UTILITY WATER
51	FIREWATER
53	FLARES
54a	STORM & OILY WATER
54b	WASTEWATER TREATING
54c	WASTEWATER PONDS
54d	SOLAR EVAPORATION POND
55	TANK FARM & DISPATCH
56	SANITARY SEWER
57	INTERCONNECTING PIPEWAY

LEGEND

- OVERHEAD PIPEWAY
- CONVEYOR
- FUTURE
- PLANT BOUNDARY
- FENCE LINE
- 4360 EXISTING CONTOUR LINE
- HPFS HIGH POINT FINISH SURFACE
- HPFL HIGH POINT FLOW LINE
- FLOW LINE (EARTH TRAPEZOIDAL CHANNEL)

NOTE: THIS DRAWING WAS USED FOR
THE PLOT PLAN (DWG.
AT A LATER DATE AND IS NOT

ISSUED FOR CIVIL EST

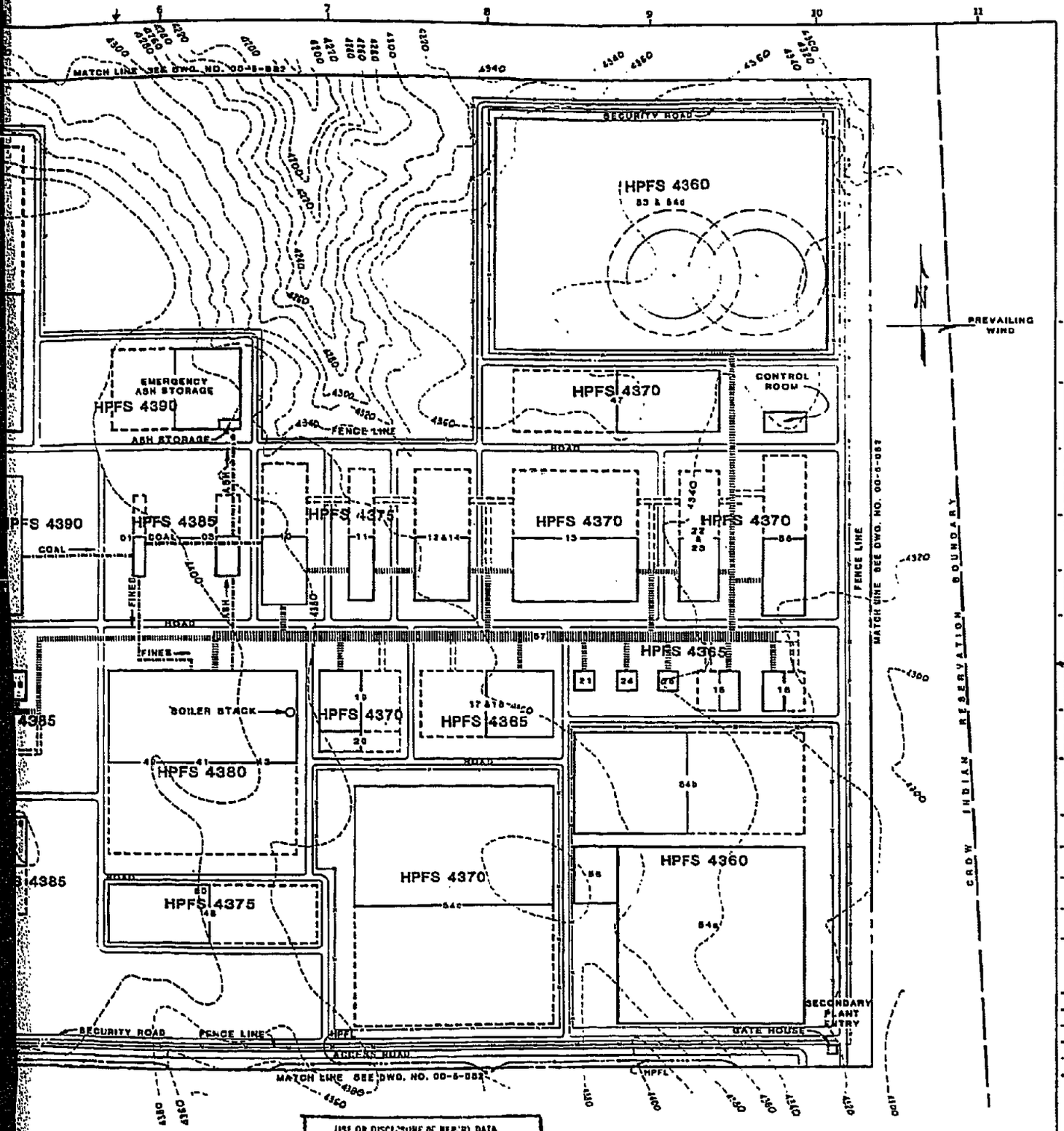

USE OR DISCLOSURE OF REPORT DATA IS SUBJECT TO THE RESTRICTION ON THE NOTICE PAGE AT THE FRONT OF THIS REPORT

WAS USED FOR THE CIVIL COST ESTIMATE. (DWG. #835704-00-5-0511 WAS REVISED ATE AND IS NOT REFLECTED IN THIS DRAWING.

0 200 400 600 800 1000 FT.

REDUCED PRINT SCALE

FIGURE 4.6.2-3

ED FOR CIVIL ESTIMATE	00-5-031	PLOT PLAN
	00-5-082	VICINITY MAP

FLUOR

SITE # 23 SITE PREPARATION
OFF-SITE DRAINAGE & GRADING PLAN
SYNFUELS FEASIBILITY STUDY
CROW TRIBE OF INDIANS MONTANA

1" = 200' | 835704-00-5-084 | A

TABLE 4.6.2-1
POND DETAILS OF CONSTRUCTION

Equipment Number	Description	Lining System Detail	DIMENSIONS (feet) X	Y	x	y	D	FBD	Side Slope	No. of Ponds	Leakage Detection?
44-TK0101	Raw Water Pond	A	775	775	667	667	18	3	3:1	1	No
44-TK0102	Raw Water Recovery	B	80	80	-	-	3	1.6	VERT.	1	No
54-TK0116	Clean Stormwater	C	550	550	442	442	18	5	3:1	1	No
54-TK0117	Oily Stormwater	D	240	240	132	132	18	3	3:1	1	Yes
47-TK0104	P.C.T. Makeup Pond	A	660	660	552	552	18	3	3:1	1	No
54-TK0103	Wastewater Equilization Pond	D	120	120	30	80	15	2	3:1	1	Yes
54-TK0113	Treated Effluent Pond	D	380	380	272	272	18	3	3:1	1	Yes
54-TK0124	Evaporation Pond	D	1600	1300	1492	1192	18	4	3:1	1	Yes
54-TK0104A/B	Aeration Basin	E	240	240	-	-	12	2:1	VERT.	2	Yes
54-TK0110	Waste Collection Sump	E	12	12	-	-	12	1.4	VERT.	1	Yes
48-TK0102	U.C.T. Recovery Sump	B	24	24	-	-	12	1.9	VERT.	1	No
54-TK0111	Diversion Pond	D	630	630	522	522	18	3	3:1	1	Yes
54-Tk0114	Diversion Box	E	30	30	-	-	12	1.4	VERT.	1	Yes

Note: DWGS. 098A & 098B show the lining system details
DWG. 099 shows the typical leakage details
DWGS. 100A & 100B show the plan and section defining the dimensions.

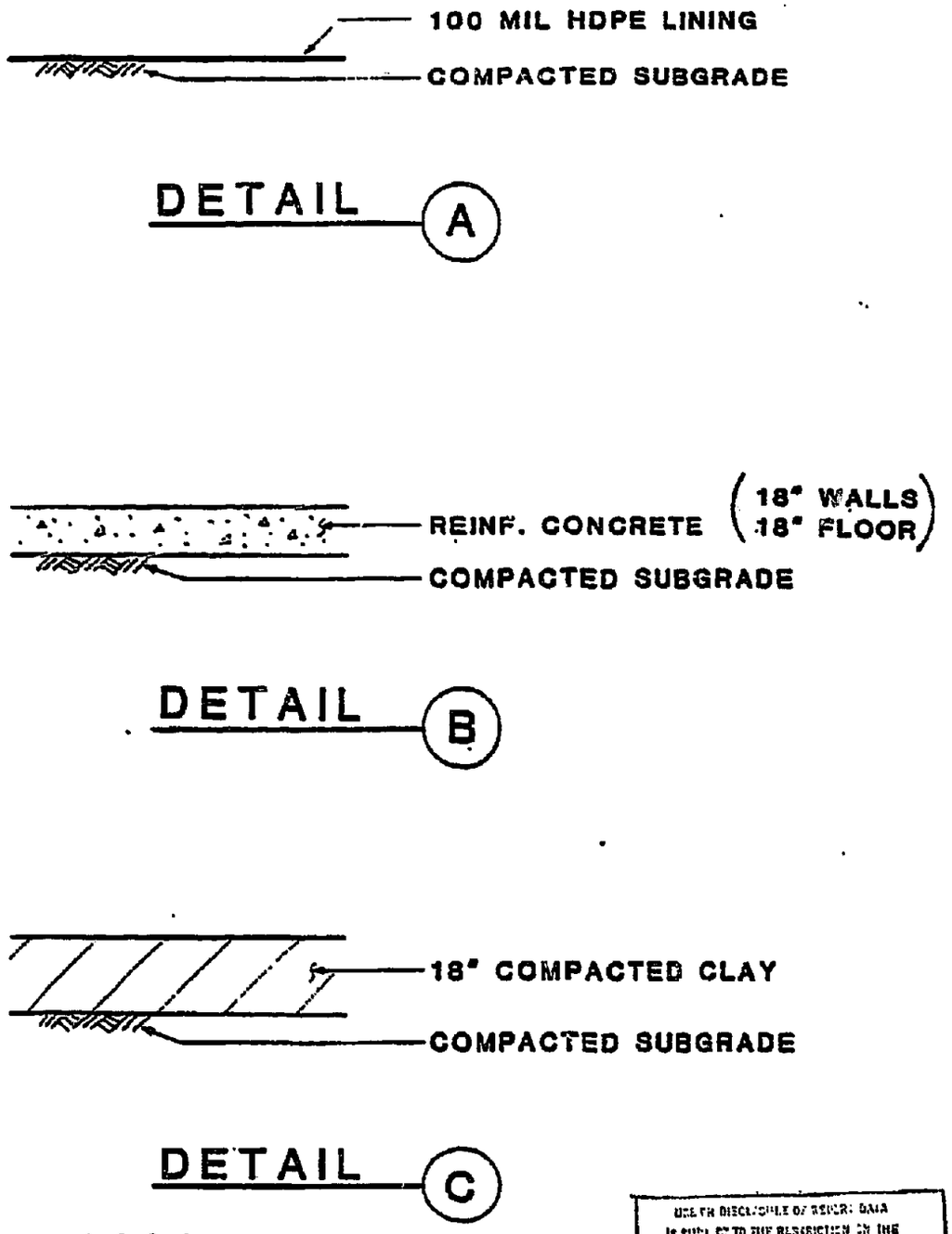

Figure 4.6.2-4

FLUOR

DR. J. Yamamoto
CH. M.D.
SUPT. A.Q.
SUPR ENG. M. Dur

POND DETAILS
LINING SYSTEM

SCALE	DRAWING NUMBER	REV.
NONE	835704-00-1-098A	1

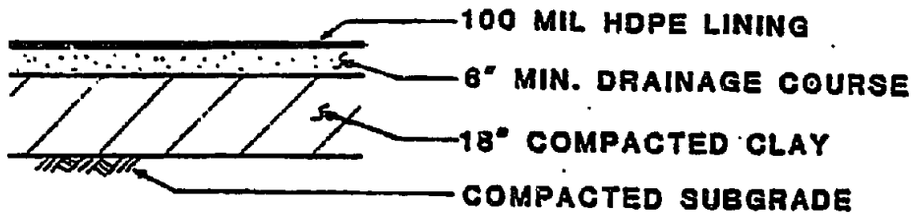

DETAIL D

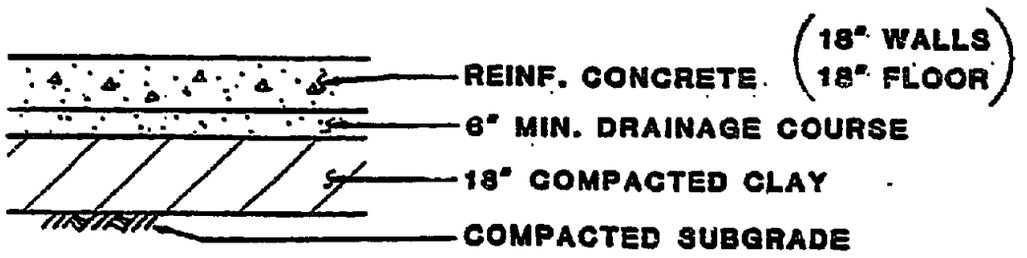

DETAIL E

Figure 4.6.2-5

FLUOR

DR Ellemamoto
CH M.D.
SUPR A.Q.
SUPR ENG. M.Dorin

POND DETAILS
LINING SYSTEM

SCALE NONE

DRAWING NUMBER 835704-00-1-098B

REV. 1

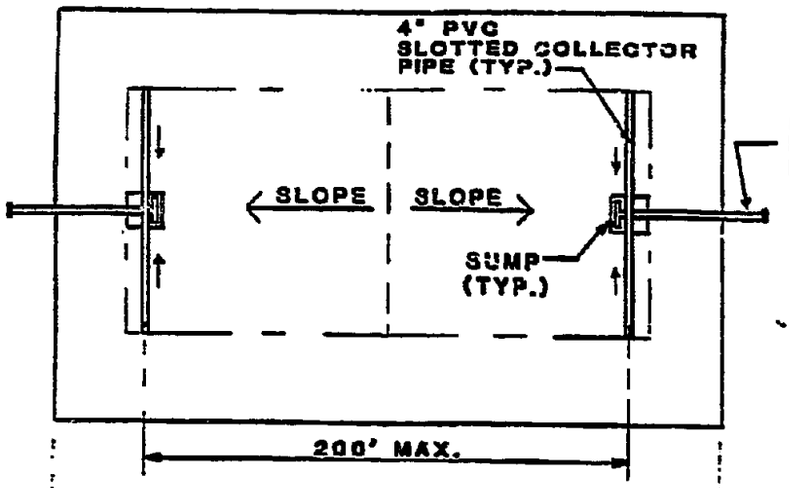

PLAN

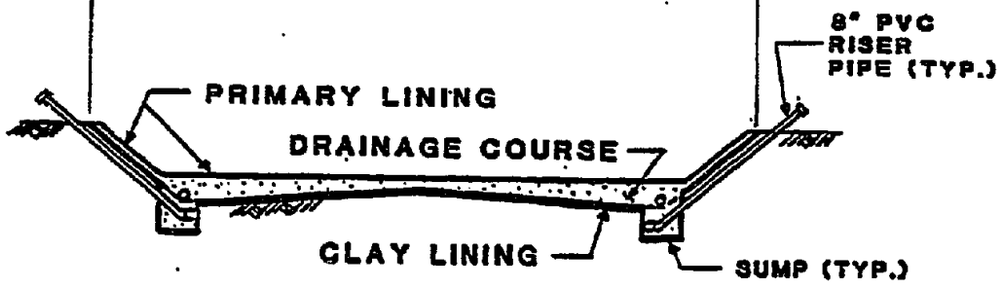

SECTION

Figure 4.6.2-6

FLUOR	DR. C. Hernandez CH. M.D. SUPR. A.Q. SUPR. ENG. M. Dorin	TYPICAL LEAKAGE DETECTION DETAILS
	SCALE: NONE	DRAWING NUMBER: 835704-00-1-099 — REV. 1

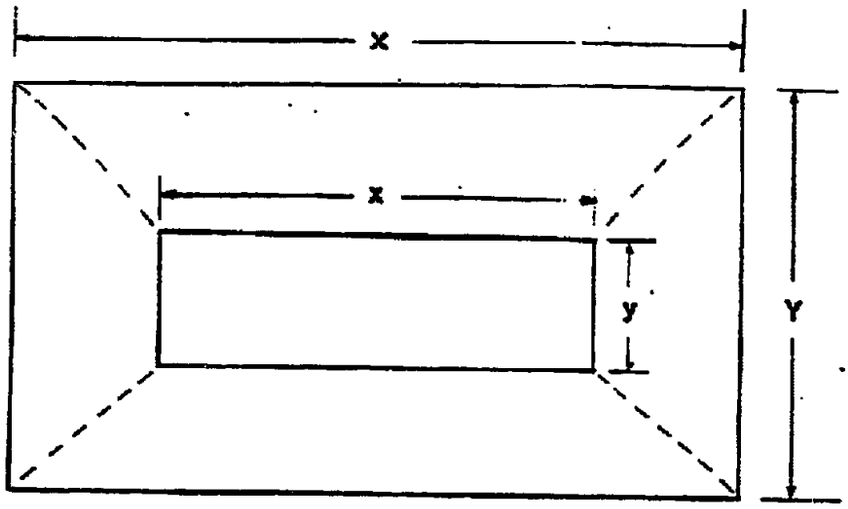

PLAN

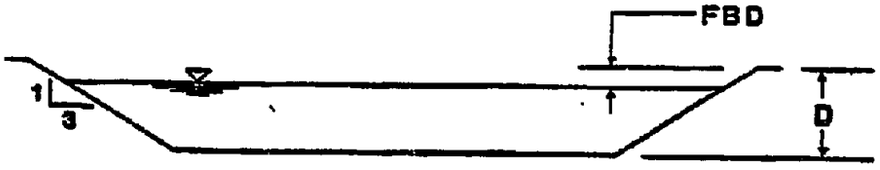

SECTION

USE OR DISCLOSURE OF REPORT DATA IS SUBJECT TO THE RESTRICTION ON THE NOTICE PAGE AT THE FRONT OF THIS REPORT

Figure 4.6.2-7

FORM-205 REV. 1/73
PRINTED IN U.S.A.

FLUOR

DR. Z. Yamamoto	POND DETAILS
CH. M.D.	PLAN AND SECTION
SUPR. A.G.	
SUPR ENG. M. Brown	
SCALE: NONE	DRAWING NUMBER: 835704-00-1-100A — REV. 1

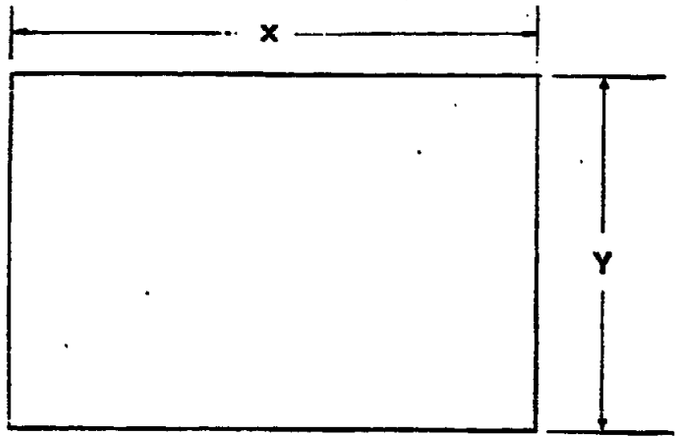

PLAN

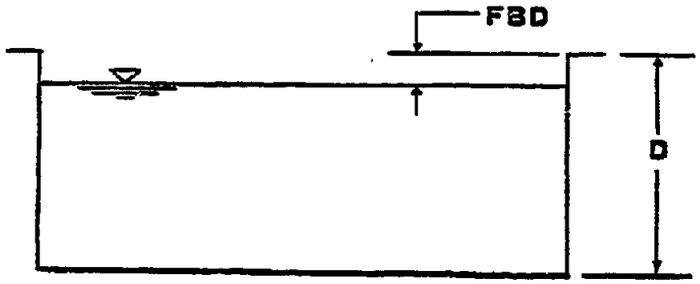

SECTION

Figure 4.6.2-8

FLUOR

DR J. Yamamoto
CH M. D.
SUPR A. G.
SUPR ENG. M. Dor

POND DETAILS
PLAN AND SECTION

SCALE NONE
DRAWING NUMBER 835704-00-1-100B
REV. 1

operators a means of detecting any failures in the foregoing pond lining system and adequate time to employ corrective measures prior to the development of a potentially adverse environmental water quality impact.

It may be concluded that, under normal plant operating conditions and barring the occurrence of any catastrophic natural events (earthquakes, floods, tornadoes, etc.), the foregoing engineered containment design of liquid waste repositories for the Crow synfuels plant should prevent any major potentially adverse environmental impacts to the water quality of the Crow Reservation and the area adjacent to the reservation. However, it must be recognized that an ion material balance was not conducted for the major and trace liquid constituents comprising the liquid waste streams as part of this feasibility study. Hence, detailed identification and characterization of the process liquid waste stream constituents is not possible at this time. It is, therefore, recommended that if the Crow synfuels project proceeds to the next phase, the process liquid waste stream characterizations whould be thoroughly evaluated in order to substantiate the long-term capability of the proposed multilayer liner system to contain the identifiable process liquid wastes.

A similar containment design approach to solid waste disposal has been developed for the proposed Crow synfuels plant. Since the quantities of solid wastes for a coal gasification plant are considerably more extensive than liquid wastes as previously demonstrated in Section 4.5.2 and the repositories are located external to the plant site boundaries, potentially more serious environmental water quality impacts than for liquid process waste residues could arise. Therefore, the next section of this report is devoted exclusively to an environmental impacts assessment of the solid wastes generated as a result of the operation of the Crow synfuels plant.

4.6.3 Solid Waste Disposal Impact Assessment

The Crow synfuels plant will produce a variety of solid wastes for disposal. The majority of the wastes consist of ash from the Lurgi coal gasification units, ash from the boilers, and sludge from the FGD unit. Other solid wastes from the plant include

water treatment sludges, spent catalysts, and general plant refuse. It is expected that general plant refuse will be at least qualitatively inspected prior to disposal at a local public waste disposal site to make certain that potentially hazardous process wastes are not inadvertently comingled. The quantification and environmental impact evaluation of the spent catalysts could not be adequately assessed due to a lack of essential proprietory information concerning their physical and chemical properties.

The proposed solid waste disposal plan was developed by Fluor as the base case for this study and, therefore, is specified for Site 1 assuming the Westmoreland coal feed. The ash and other solid wastes will be stored adjacent to the synfuels plant battery limits, as shown in Figure 4.6.3-1, since ash disposal at the existing Westmoreland Absaloka mine is not an economical option as discussed in greater detail in Volume V of this report. For the alternate Shell coal case at Site 23, the ash will be returned to the proposed Shell mine for disposal.

The ash mineral analysis, the trace element analyses, the FGD sludge composition, and the raw water treatment sludge composition are included in the block flow-diagrams for the solid effluents as presented in Figures 4.6.3-2, 4.6.3-3, and 4.6.3.-4, respectively, for the previously discussed Case IA and Case IIA design scenarios utilizing a Westmoreland coal feed and the Case IIA design scenario employing a Shell coal feed. It must be emphasized that the block flow diagrams depict base case design scenarios for an initial 125 MM SCF/D SNG production rate recalling that the facility will have the capability of upgrading to the 250 MM SCF/D SNG production rate which represents "worst-case" design conditions in terms of potential environmental impacts. Therefore, design case scenarios I and II represent the proposed ultimate, upgraded plant design conditions.

4.6.3.1 Volume Requirements for Solid Waste Disposal

The volume requirements for solid waste disposal for Case I and Case II design scenarios utilizing a Westmoreland coal and the Case II design scenario employing a Shell coal feed are summarized in Table 4.6.3-1. The worst-case scenario, Case II,

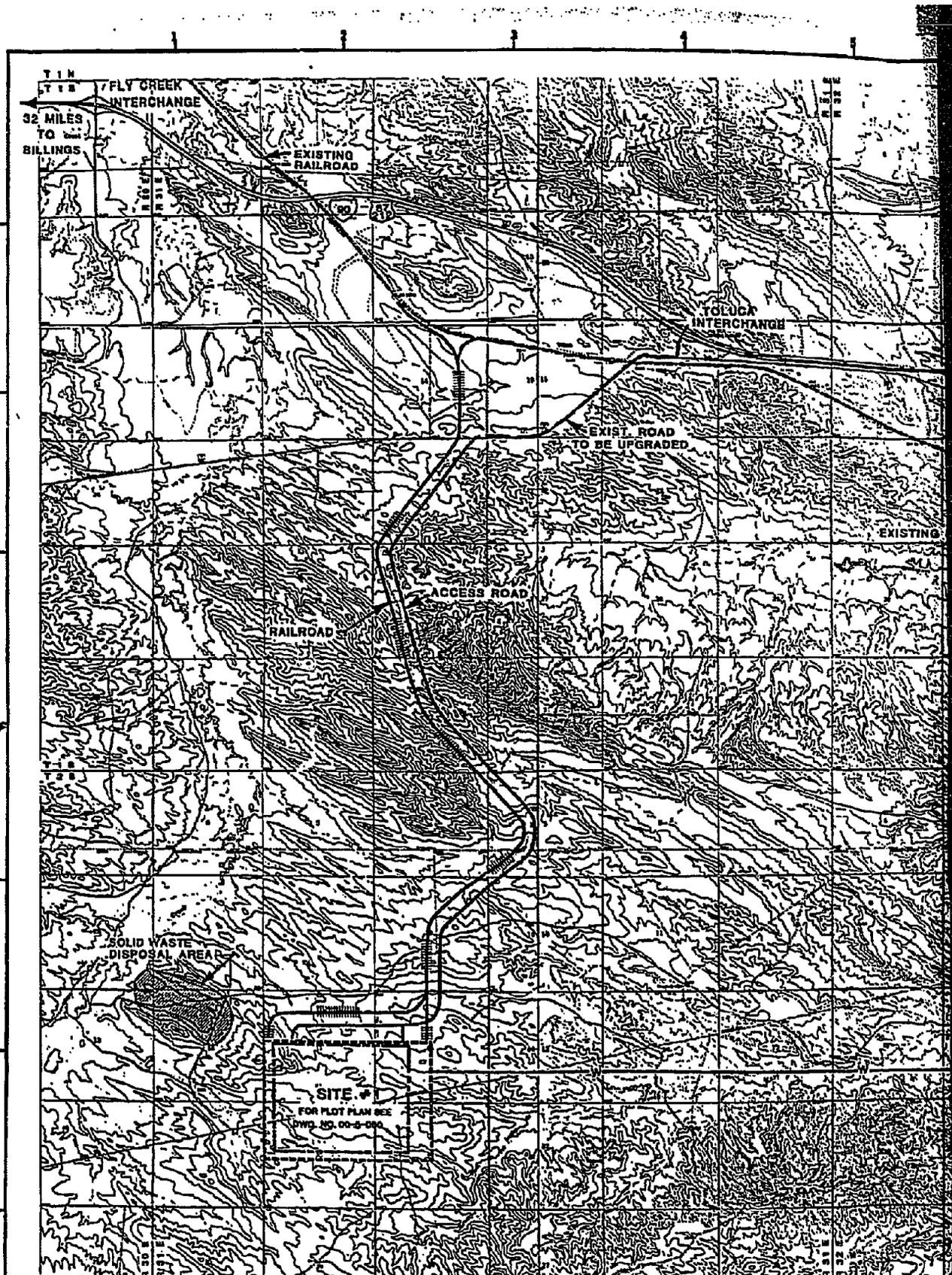

LEGEND

- SITE BOUNDARY
- ACCESS ROAD
- RAILROAD
- WATER LINE
- EXISTING RAILROAD
- PLANT BOUNDARY

2000 1000 500 0 2000 4000 FEET

REDUCED PRINT SCALE

1		ISSUED FOR STUDY

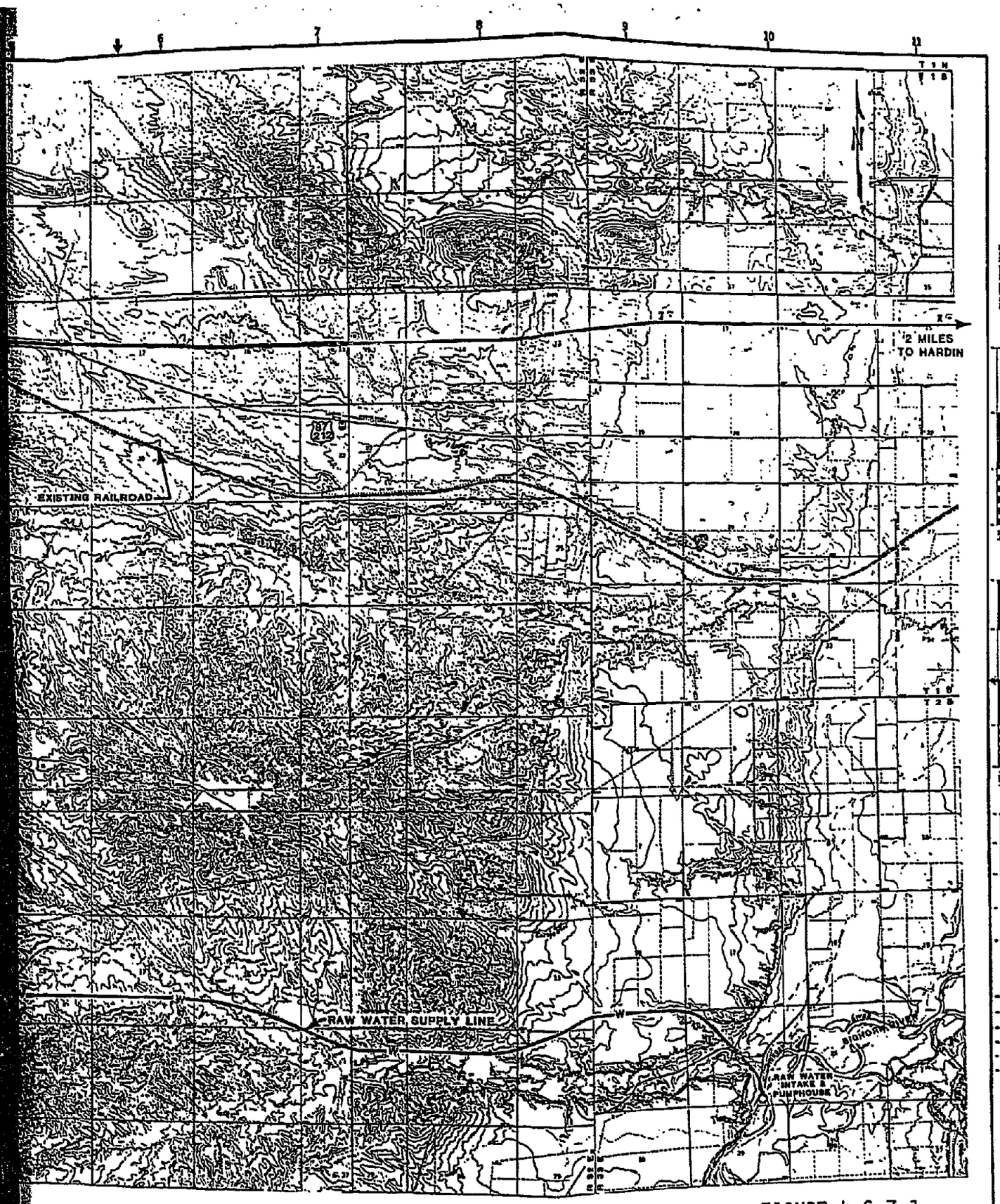

FIGURE 4.6.3-1

00-6-078	AREA MAP		
00-6-080	PLOT PLAN		

FLUOR

SITE #1 VICINITY MAP

SYNFUELS FEASIBILITY STUDY

CROW TRIBE OF INDIANS MONTANA

1"=2000' 835704-00-5-080 1

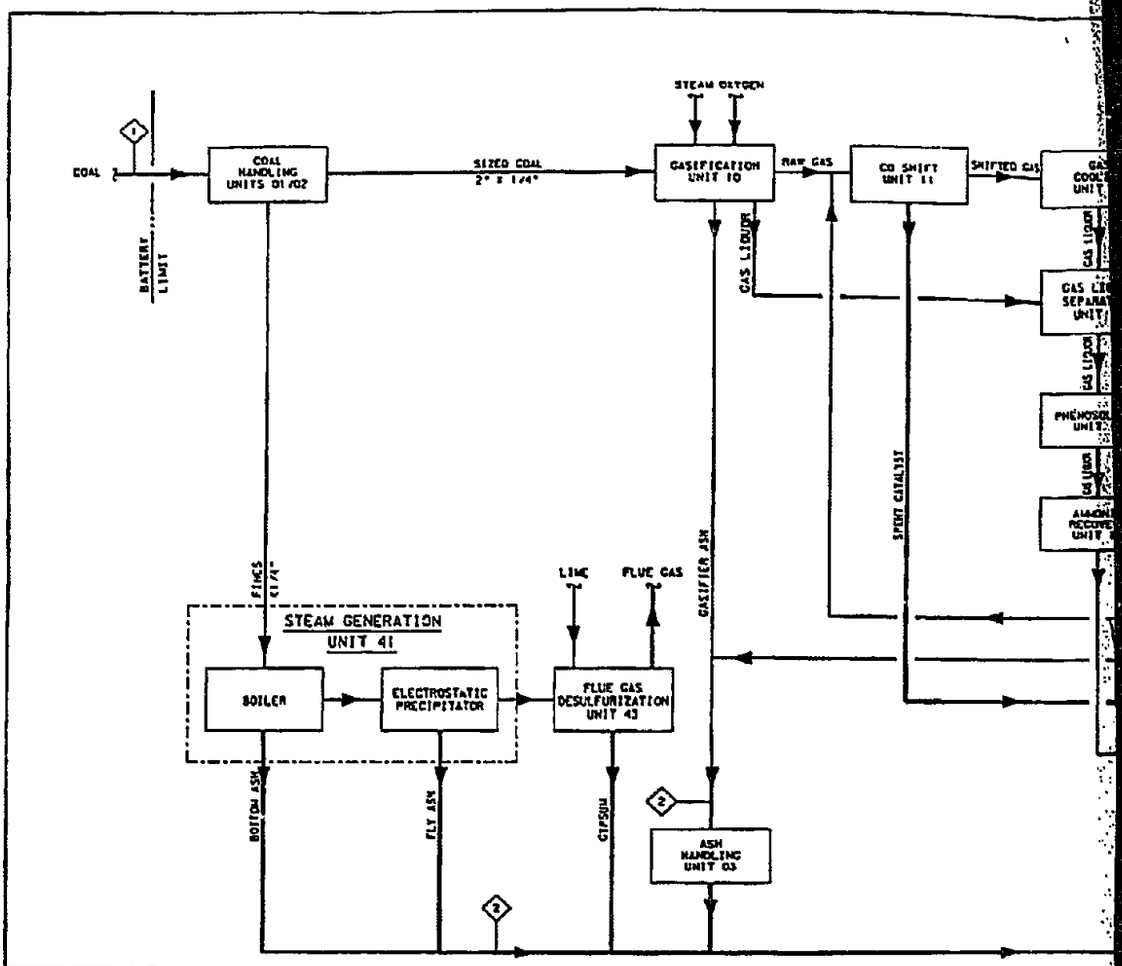

1 COAL (NOTE 1)		2 ASH (NOTES 2 - 4)		3 FGD GYPSUM (NOTE 5)		4 RAW WATER TREATMENT SLUDGE		5 WATER TREATING	
TRACE ELEMENTS	PPM	MINERAL ASH ANALYSIS	WT%		WT%		WT%		WT%
ANTIMONY	0.67	SiO_2	35.9	H_2O	23.0	$CaCO_3$	55.5	SPENT ACTIVATED CARBON	41.9
ARSENIC	1.77	Al_2O_3	19.2	$CaSO_4 \cdot 2H_2O$	73.0	$Mn(OH)_2$	0.9	SPENT ION EXCHANGE RESIN	58.1
BARIUM	181.50	Fe_2O_3	7.5	$CaCl_2$	0.5	H_2O	40.0		
BERYLLIUM	1.25	MgO	3.0	INERT SOLIDS	1.5	MISCELLANEOUS	3.6		
BORON	218.50	K_2O	0.18	$Ca(OH)_2$	TRACE				
BROMINE	19.38	CaO	14.5	$Ca(COOH)_2$	TRACE				
CADMIUM	1.10	MnO	2.4						
CERIUM	17.64	TiO_2	1.2						
CHROMIUM	6.38	P_2O_5	0.28						
COBALT	3.62	SO_3	14.1						
COPPER	21.42	INDETERMINATE	1.74						
FLUORINE	227.40								
LEAD	3.30								
LITHIUM	35.20								
MANGANESE	202.00								
MERCURY	0.04								
NICKEL	7.42								
SELENIUM	1.30								
SILVER	0.09								
STRONTIUM	497.02								
THALLIUM	0.23								
URANIUM	1.43								
VANADIUM	18.48								
ZINC	15.70								
ZIRCONIUM	128.00								

NOTES:

1. TRACE ELEMENT ANALYSIS FROM WESTMORELAND MINE ENVIRONMENTAL IMPACT STATEMENT.
2. MINERAL ASH ANALYSES BASED ON LURGI DATA. WESTMORELAND MINE. GASIFIER ASH ALSO CONTAINS 4% CARBON.
3. AMOUNT OF GASIFIER ASH CALCULATED BASED ON 450 T/HR GASIFIER COAL CONSUMED.
4. AMOUNT OF BOILER ASH CALCULATED BASED ON 98.6 T/HR BOILER COAL CONSUMED.
5. TOTAL GYPSUM PRODUCED BASED ON FGD LICENSOR INFORMATION.
6. THE CLEAN STORM WATER PONDS ARE CLEANED AS NECESSARY. THE AMOUNT OF SOLIDS REMOVED FROM THESE PONDS IS INDETERMINATE.
7. THE COMPOSITIONS OF THE INCINERATOR WASTE AND UCT BLOWDOWN TREATMENT SLUDGE ARE NOT AVAILABLE.
8. THE FLOW QUANTITIES AND COMPOSITIONS SHOWN ARE TO BE USED SOLELY FOR PROCESS DESIGN PURPOSES AND ARE NOT NECESSARILY THE CONDITIONS WHICH WILL BE ATTAINED DURING ACTUAL OPERATIONS.

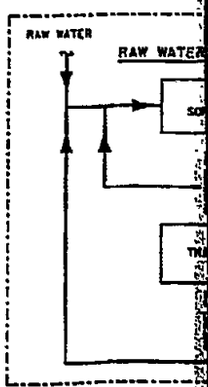

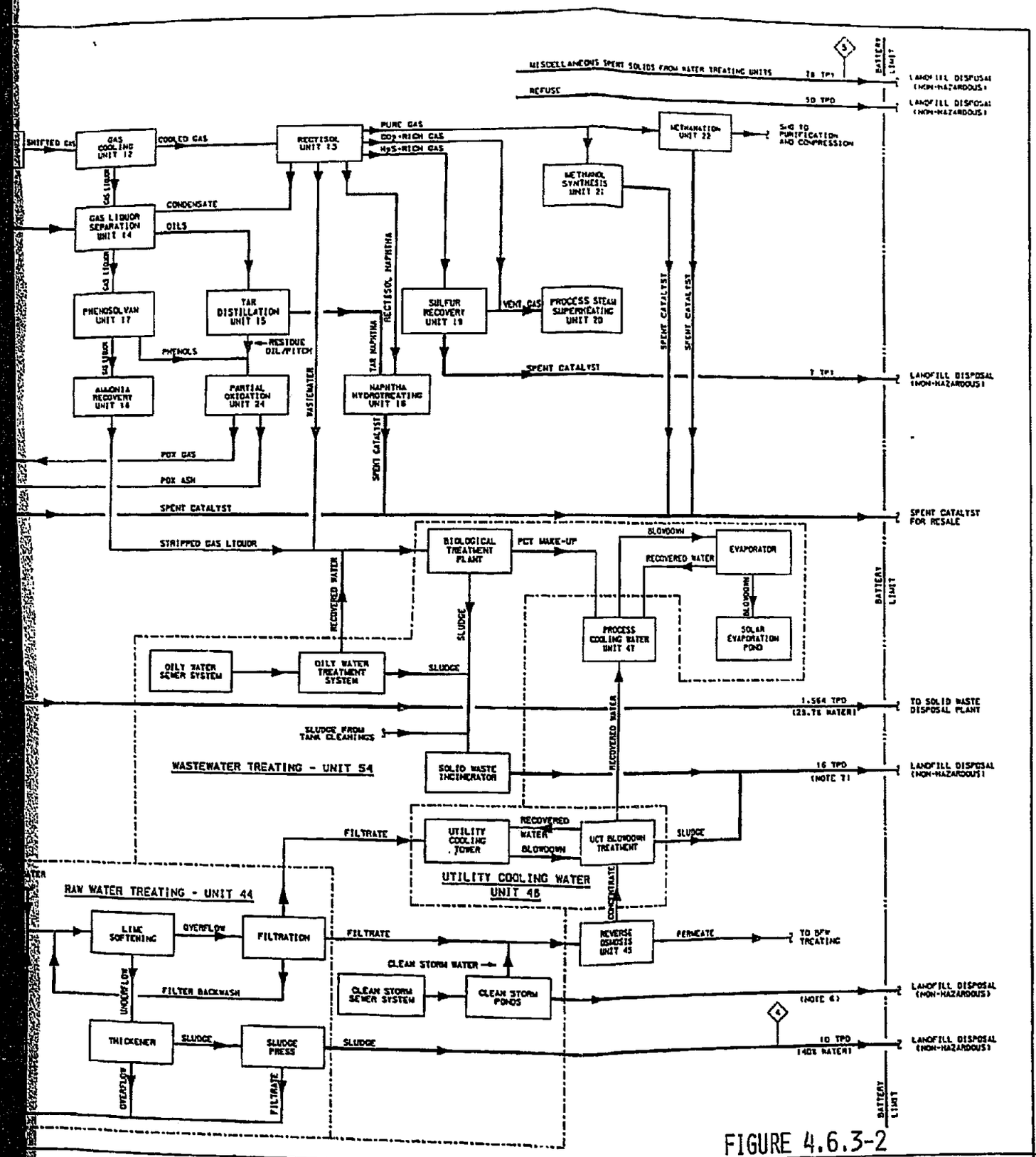

FIGURE 4.6.3-2

FLUOR

R. WHITE
C.F. ABATAY
R.B. BELWITO
R.J. McCARTHY
R. LANG

BLOCK FLOW DIAGRAM
CASE 1A SOLID EFFLUENT
CASE: WESTMORELAND COAL - POWER SELF-SUFFICIENCY
CROW TRIBE OF INDIANS
SYNFUELS FEASIBILITY STUDY

NONE | 835704-00-4-206 | 1

ODI 35700206

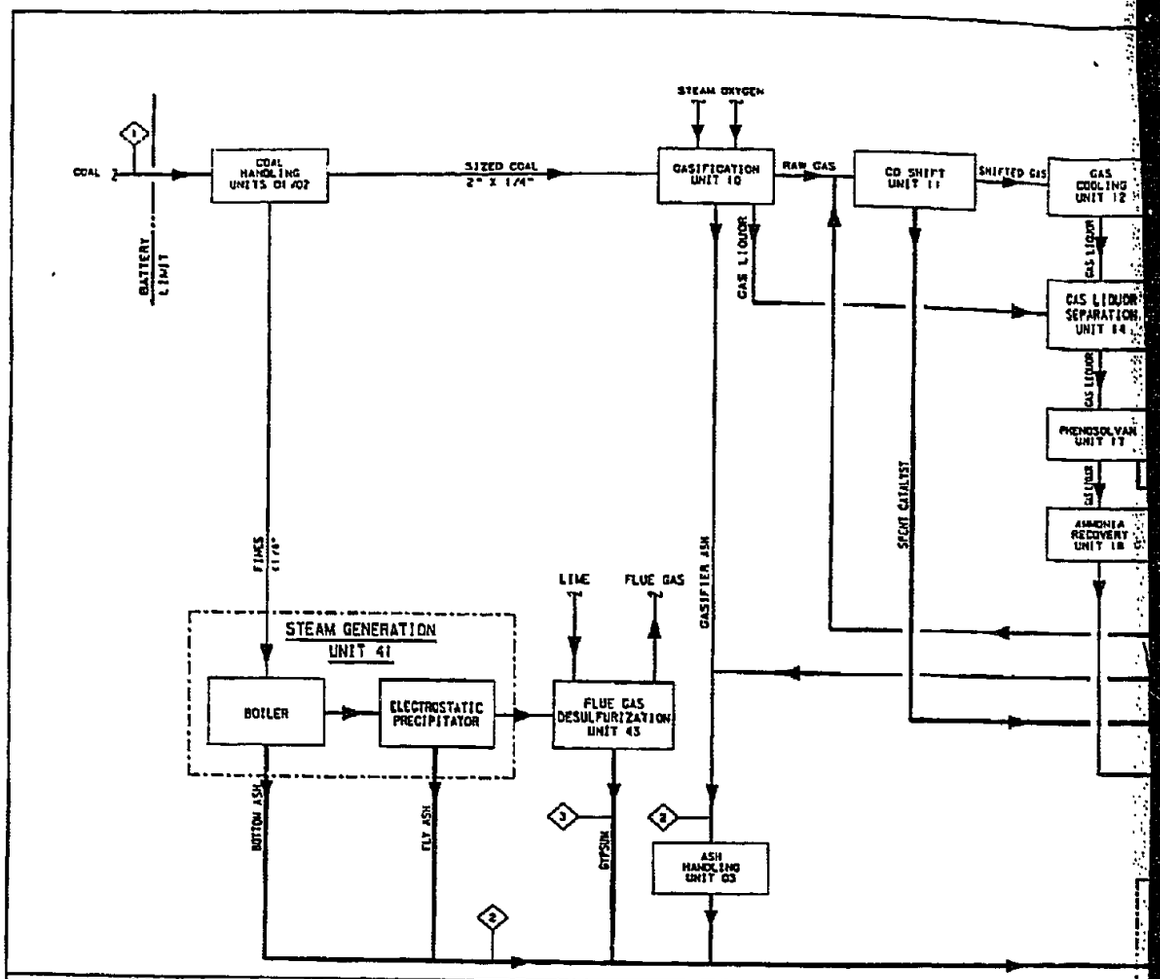

1 COAL (NOTE 1)		2 ASH (NOTES 2 - 4)		3 FGD GYPSUM (NOTE 5)		4 RAW WATER TREATMENT SLUDGE		5 WATER TREATING	
TRACE ELEMENTS	ppm	MINERAL ASH ANALYSIS	WT%		WT%		WT%		WT%
ANTIMONY	0.67	SiO_2	35.3	H_2O	23.0	$CaCO_3$	55.5	SPENT ACTIVATED CARBON	41.9
ARSENIC	1.77	Al_2O_3	19.2	$CaSO_4 \cdot 2H_2O$	75.0	$Mg(OH)_2$	0.9	SPENT ION EXCHANGE RESIN	58.1
BARIUM	181.60	Fe_2O_3	7.5	$CaCl_2$	0.5	H_2O	40.0		
BERYLLIUM	1.25	MgO	3.0	INERT SOLIDS	1.5	MISCELLANEOUS	3.6		
BORON	218.60	K_2O	0.18	$Ca(OH)_2$	TRACE				
BROMINE	19.35	Na_2O	0.18	$Ca(COOH)_2$	TRACE				
CADMIUM	1.80	CaO	14.5						
CERIUM	17.64	MgO	2.4						
CHROMIUM	6.38	TiO_2	1.2						
COBALT	3.62	P_2O_5	0.28						
COPPER	31.42	SO_3	14.1						
FLUORINE	227.40	INDETERMINATE	1.74						
LEAD	3.30								
LITHIUM	35.20								
MANGANESE	202.00								
MERCURY	0.08								
NICKEL	7.42								
SELENIUM	1.30								
SILVER	0.09								
STRONTIUM	497.02								
THALLIUM	0.23								
URANIUM	1.43								
VANADIUM	18.48								
ZINC	15.70								
ZIRCONIUM	128.00								

NOTES:

1. TRACE ELEMENT ANALYSIS FROM WESTMORELAND MINE ENVIRONMENTAL IMPACT STATEMENT.
2. MINERAL ASH ANALYSIS BASED ON LURGI DATA. WESTMORELAND MINE. GASIFIER ASH ALSO CONTAINS 4% CARBON.
3. AMOUNT OF GASIFIER ASH CALCULATED BASED ON 450 T/HR GASIFIER COAL CONSUMED.
4. AMOUNT OF BOILER ASH CALCULATED BASED ON 300 T/HR BOILER COAL CONSUMED.
5. TOTAL GYPSUM PRODUCED BASED ON FGD LICENSOR INFORMATION.
6. THE CLEAN STORM WATER PONDS ARE CLEANED AS NECESSARY. THE AMOUNT OF SOLIDS REMOVED FROM THESE PONDS IS INDETERMINATE.
7. THE COMPOSITIONS OF THE INCINERATOR WASTE AND UCT BLOWDOWN TREATMENT SLUDGE ARE NOT AVAILABLE.
8. THE FLOW QUANTITIES AND COMPOSITIONS SHOWN ARE TO BE USED SOLELY FOR PROCESS DESIGN PURPOSES AND ARE NOT NECESSARILY THE CONDITIONS WHICH WILL BE ATTAINED DURING ACTUAL OPERATIONS.

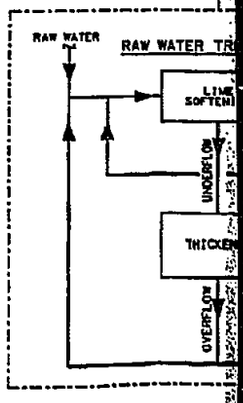

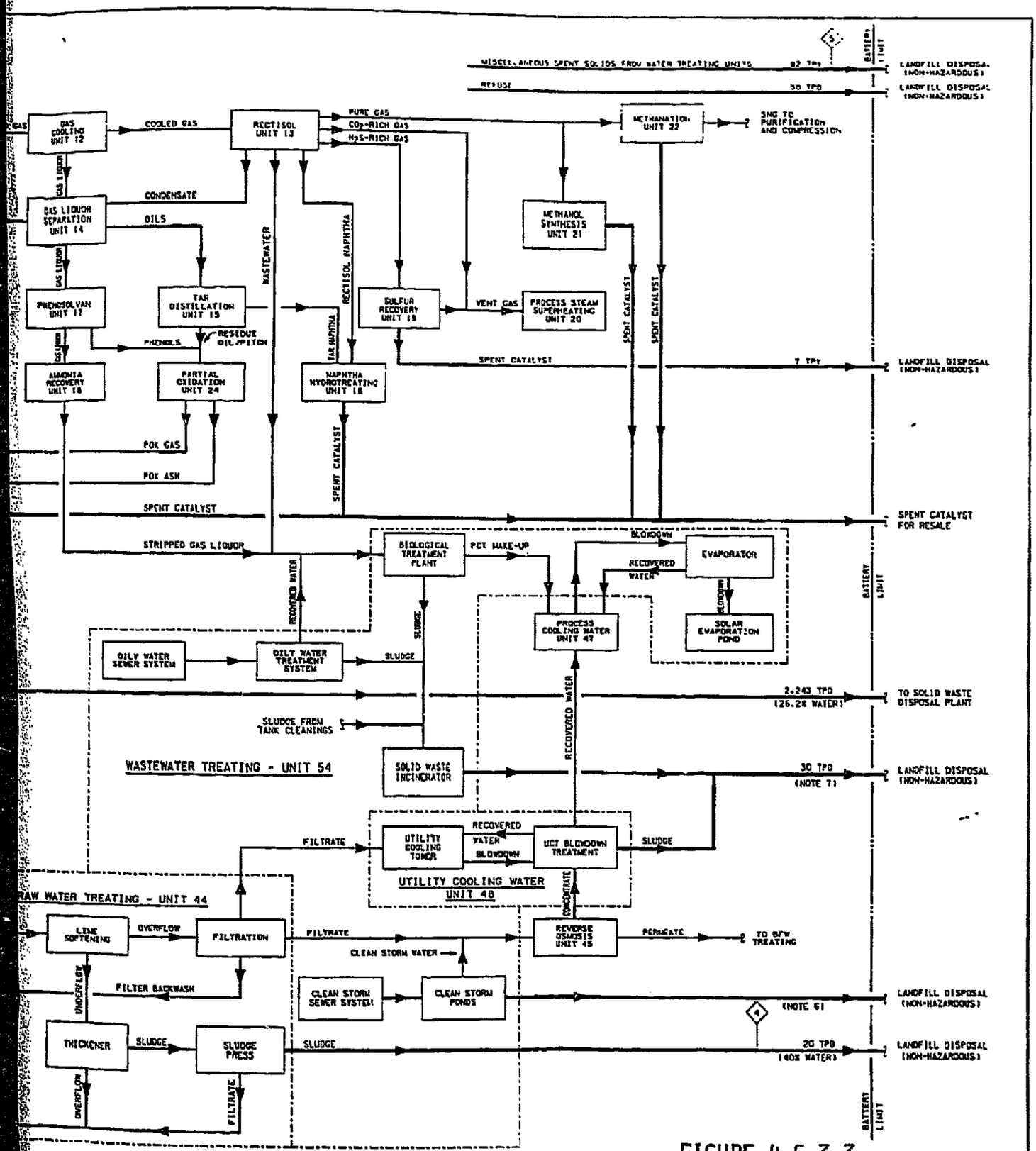

FIGURE 4.6.3-3

BLOCK FLOW DIAGRAM

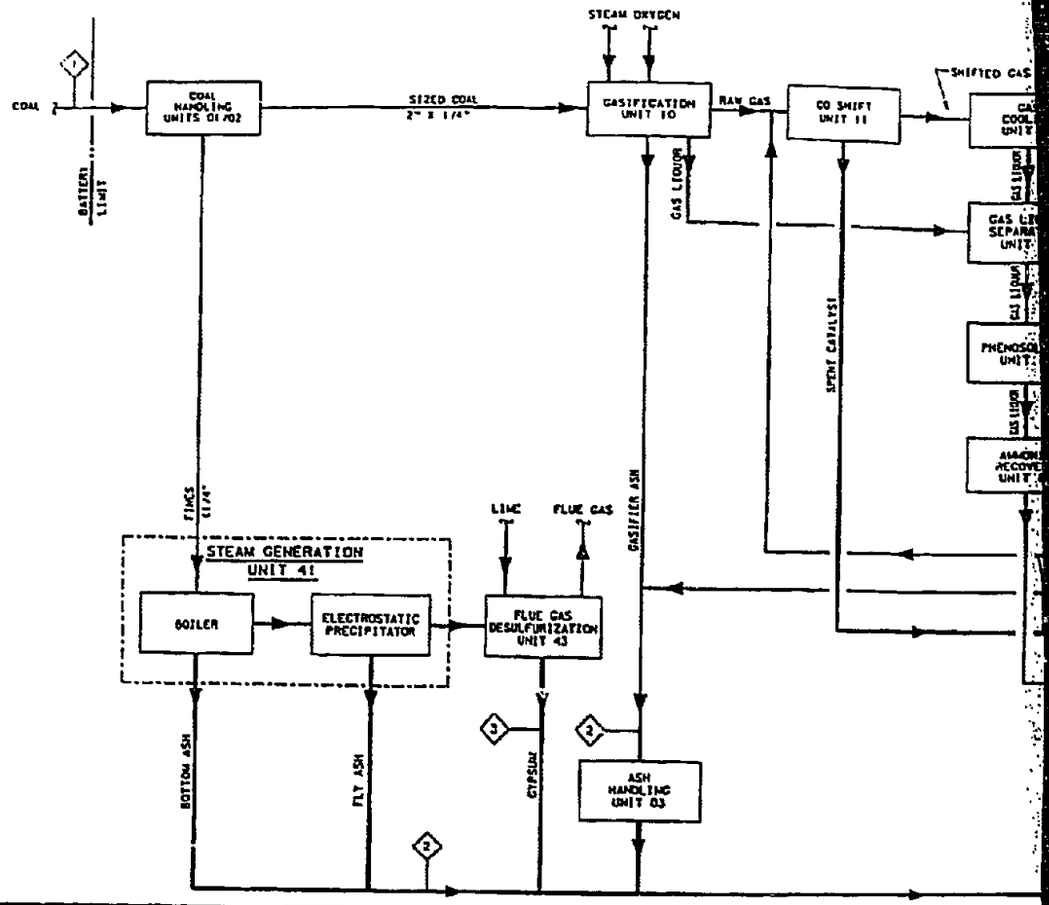

1 COAL (NOTE 1)		2 ASH (NOTES 2 - 4)		3 FGD GYPSUM (NOTE 5)		4 RAW WATER TREATMENT SLUDGE		5 WATER TREATING	
TRACE ELEMENTS	ppm	MINERAL ASH ANALYSIS	WT%		WT%		WT%		WT%
ANTIMONY	0.49	SiO_2	29.4	H_2O	23.0	$CaCO_3$	55.5	SPENT ACTIVATED CARBON	41.9
ARSENIC	3.15	Al_2O_3	16.1	$CaSO_4 \cdot 2H_2O$	73.0	$Mn(OH)_2$	0.9	SPENT ION EXCHANGE RESIN	58.1
BARIUM	89.05	Fe_2O_3	6.2	$CaCl_2$	0.5	H_2O	40.0		
BERYLLIUM	0.21	MgO	0.35	INERT SOLIDS	1.5	MISCELLANEOUS	3.6		
BORON	44.05	K_2O	0.36	$Co(OH)_2$	TRACE				
BROMINE	1.08	Na_2O	0.36	$Co(COOH)_2$	TRACE				
CADMIUM	0.38	CaO	21.8						
CERIUM	3.52	MnO	7.3						
CHROMIUM	3.85	TiO_2	1.6						
COBALT	0.79	P_2O_5	0.3						
COPPER	11.57	SO_3	13.9						
FLUORINE	95.29	INDETERMINATE	2.62						
LEAD	1.67								
LITHIUM	8.69								
MANGANESE	20.46								
MERCURY	0.06								
NICKEL	2.15								
SELENIUM	0.52								
SILVER	0.14								
STRONTIUM	168.69								
THALLIUM	0.36								
URANIUM	1.45								
VANADIUM	11.63								
ZINC	3.76								
ZIRCONIUM	48.04								

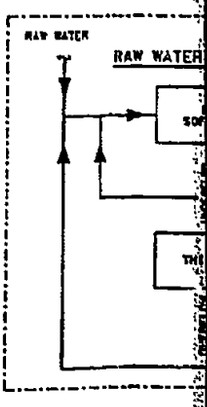

NOTES:

1. TRACE ELEMENT ANALYSIS FROM YOUNG'S CREEK AREA COAL.
2. MINERAL ASH ANALYSIS BASED O. LURGI DATA. SHELL RESERVE. GASIFIER ASH ALSO CONTAINS 4.5% CARBON.
3. AMOUNT OF GASIFIER ASH CALCULATED BASED ON 440 T/HR GASIFIER COAL CONSUMED.
4. AMOUNT OF BOILER ASH CALCULATED BASED ON 293 T/HR BOILER COAL CONSUMED.
5. TOTAL GYPSUM PRODUCED BASED ON FGD LICENSOR INFORMATION.
6. THE CLEAN STORM WATER PONDS ARE CLEANED AS NECESSARY. THE AMOUNT OF SOLIDS REMOVED FROM THESE PONDS IS INDETERMINATE.
7. THE COMPOSITIONS OF THE INCINERATOR WASTE AND UCT BLOWDOWN TREATMENT SLUDGE ARE NOT AVAILABLE.
8. THE FLOW QUANTITIES AND COMPOSITIONS SHOWN ARE TO BE USED SOLELY FOR PROCESS DESIGN PURPOSES AND ARE NOT NECESSARILY THE CONDITIONS WHICH WILL BE ATTAINED DURING ACTUAL OPERATIONS.

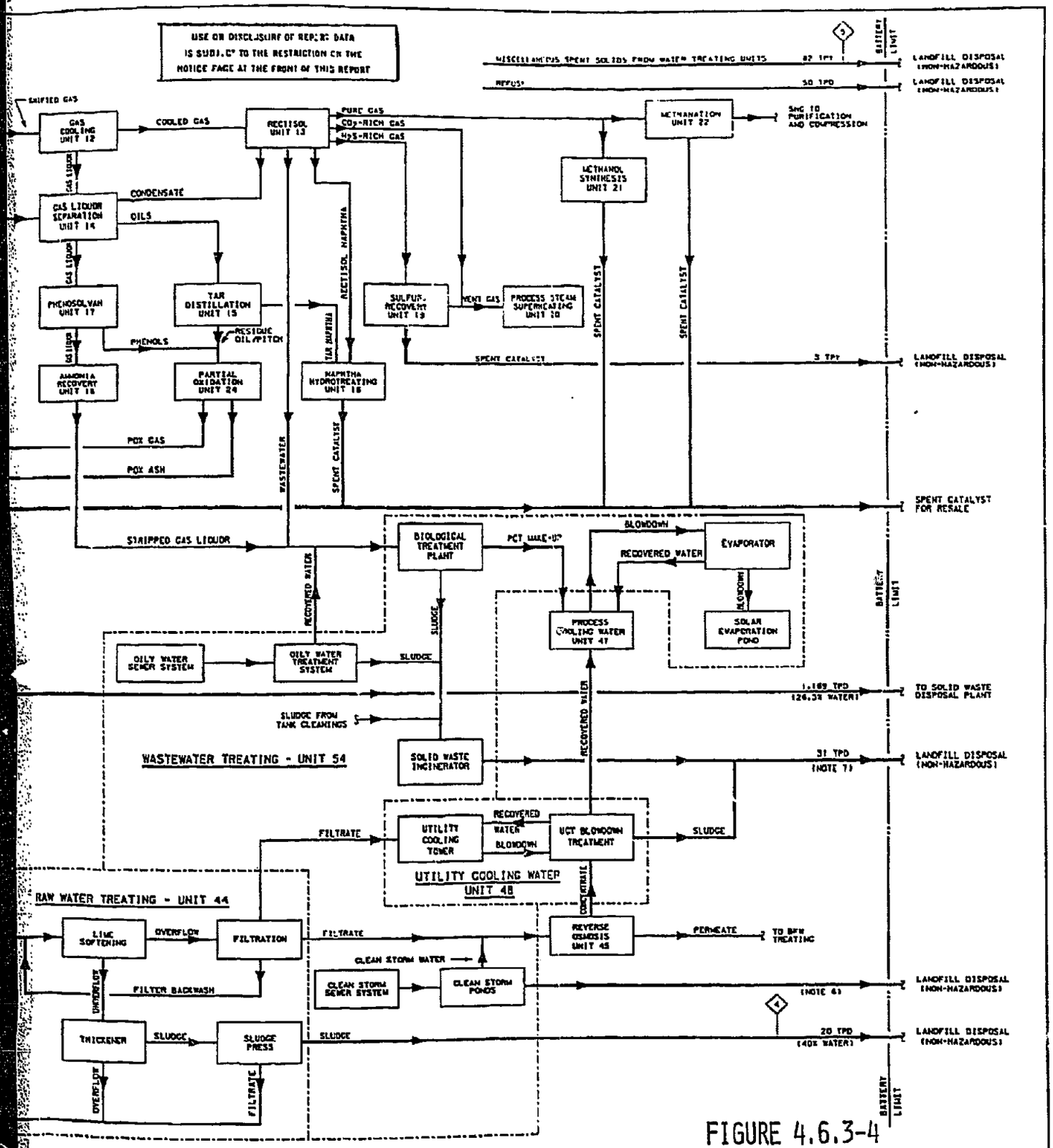

FIGURE 4.6.3-4

FLUOR	R. WHITE / G.C. ABATAY / W.D. DELMITO / R. McCARTHY / R. LANG	CASE 2A BLOCK FLOW DIAGRAM SOLID EFFLUENT CASE: SHELL COAL - 40% FINES - SNG CROW TRIBE OF INDIANS — SYNFUELS FEASIBILITY STUDY	001 35T00406
		NONE — 835704-00-4-406	1

TABLE 4.6.3-1

ANNUAL AND 25-YEAR SOLID WASTE DISPOSAL VOLUME REQUIREMENTS:

CROW SYNFUELS PLANT

	Westmoreland Coal					Shell Coal		
Constituent	Case I	Case IA	Case II	Case IIA	Case III	Case II	Case IIA	Case III
Million cubic yards per year:								
Boiler Ash	0.114	0.057	0.276	0.138	—	0.188	0.094	—
Gasifier Ash	0.543	0.271	0.542	0.271	—	0.294	0.147	—
FGD Sludge	0.053	0.027	0.159	0.080	—	0.083	0.041	—
Total	0.710	0.355	0.977	0.489	—	0.565	0.282	—
Million cubic yards per 25-year plant life:								
Boiler Ash	2.850	1.425	6.900	3.450	6.219	4.700	2.850	4.233
Gasifier Ash	13.575	6.775	13.550	6.775	12.205	7.350	3.675	6.610
FGD Sludge	1.325	0.675	3.975	2.000	3.584	2.075	1.037	1.875
Total	17.750	8.875	24.425	12.225	22.008	14.125	7.562	12.718

Case I: 250 MM SCF/D SNG, power for internal needs only.
Case IA: 125 MM SCF/D SNG, power for internal needs only.
Case II: 250 MM SCF/D SNG, additional electrical power for sale.
Case IIA: 125 MM SCF/D SNG, additional electrical power for sale.
Case III: Five years at 125 MM SCF/D SNG and 20 years at 250 MM SCF/D SNG, additional electrical power produced for sale.

employing the Westmoreland coal that the proposed ultimate production rate of 250 MM SCF/D and producing additional electrical power above that required for internal plant consumption, is shown in Table 4.6.3-1 to produce 0.977 million cubic yards of major solid waste effluents on an annual basis or 24.4 million cubic yards of solid waste over a 25-year plant operating life. Similarly, the 125 MM SCF/D SNG Case IIA design scenario counterpart of Case II, shown in Figure 4.6.3-4, produces approximately one-half of the volume of solid wastes, i.e., 0.489 million cubic yards per year or 12.2 million cubic yards in the 25-year plant operating lifetime. About 55.48 percent of the solid waste volume for the design Case II and IIA scenario utilizing Westmoreland coal is the result of gasifier ash from the Lurgi process with ash and FGD sludges from the boiler operation representing about 28.25 percent and 16.27 percent, respectively, of the total solid waste volume both annually and cumulatively over 25 years as presented in Table 4.6.3-1. The design Case IA represents the lowest solid waste volume requirement for the designs using a Westmoreland coal feed. Solid waste volumes of 0.710 million cubic yards over 25 years are evidenced for design Case 1A in Table 4.6.3-1, with gasifier ash representing about 76.5 percent of the total solid waste volume. This result arises from the reduced requirement for the boilers, since the plant is designed to produce only enough power for internal facility needs.

A more realistic overall plan for long-term Crow synfuels plant operation is represented by the Case III scenarios as shown in Table 4.6.3-1. Case III scenarios assume cumulative 25-year solid waste volumes based upon a 5-year operation at the Case IIA design level (125 MM SCF/D SNG) followed by a 20-year operation of the upgraded Case II plant design, Utilization of the excess coal fines to produce additional electrical power for sale to an electrical utility possibly represents a more economically viable mode of plant operation than other options evaluated in this feasibility study as discussed in Volume II in considerably more detail.

Table 4.6.3-1 indicates a 25-year solid waste volume commitment of approximately 22 million cubic yards for the foregoing Case III scenario utilizing Westmoreland coal supply. About 55.4 percent of the total solid waste resulting from Lurgi gasifier ash.

Design scenarios Case IIA and II employing the Shell coal feed result in considerably less solid waste disposal volume requirements due principally to lower ash content and also lower sulfur content of the Shell coal resulting in lower SO_2 emission control requirements (84 percent vs 90 percent) and, hence, less FGD sludge production for disposal.

Shell coal feed Cases IIA and II are shown in Table 4.6.3-1 to result in solid waste disposal volumes of 0.282 million cubic yards and 0.565 million cubic yards, respectively, on an annual basis; and 7.562 million cubic yards and 14.125 million cubic yards, respectively, over an assumed 25-year plant operating period for the previously cited Shell coal design Cases IIA and II.

4.6.3.2 Solid Waste Disposal Plan and Facility

The solid waste disposal plant design is based upon the cumulative 25-year solid waste disposal volume requirement of approximately 12 million cubic yards; i.e., the base Case IIA design (125 MM SCF/D SNG with additional electrical power production for external sales) with a Westmoreland coal supply. The solid waste disposal planned facility design as shown in Figure 4.6.3-1 promulgates a containment approach conceptually similar to the "zero discharge" design features employed to contain process liquid waste residues previously discussed in Section 4.6.2.

The site for disposal of the major process solids residues, specific to the Site 1 plant siting area, is shown in Figure 4.6.3-1 to be located approximately one-half mile northwest of the Site 1 boundary. Figures 4.6.3-1 and 4.6.3-5 demonstrate that the selected solids waste disposal site takes advantage of the natural topographic relief and the natural water drainage characteristics in the area, thereby reducing both the disturbed land surface area and excavation requirements for the facility.

The site development work is divided into two categories: (1) investment for the first 2 years, and (2) investment for the remaining 23 years. Table 4.6.3-2 lists the stepwise earthwork requirements for each investment.