2.3 Gasifiers Associated with Direct Liquefaction

All direct liquefaction processes require a source of hydrogen. Depending on the process, the hydrogen may be mixed with the feed-slurry or it may be used to hydrogenate a donor solvent which, in turn, is used to slurry the coal. The most readily available hydrogen source is water which can be stripped of its oxygen atom in a gasifer by using a suitable carbonaceous material such as part of the feed coal or the residue that remains after hydrogenation of the coal. In the gasifier the residue or coal is gasified and the ash leaves at the bottom of the gasifier.

The gasifiers that are surveyed in this section of the report are commerical units or developments of commercial types and they all have the potential to be used in direct liquefaction plants.

2.3.1 Koppers-Totzek process

Koppers-Totzek (KT) is the only entrained-bed coal gasifier in commercial operation. It operates at atmospheric pressure and under slagging conditions. The gasifier can be utilized for hydrogen production in direct liquefaction processes. (There is current litigation between the German firm GKT and the U.S. firm Koppers Co. regarding rights to the technology and the name of the process commonly known as the Koppers-Totzek process.)

2.3.1.1 History and Status

The Koppers-Totzek gasifier was first commercially operated in Finland in 1951 by H. Koppers Company (now Krupp-Koppers GmbP) of Essen, West Germany. Since the startup of this plant, more than 50 gasifiers designed and constructed by Krupp-Koppers have been delivered by 21 individual contracts to 14 clients, representing a total capacity of 13.5 million m^3 (475 million ft^3) of synthesis gas ($CO + H_2$) per day.

Currently there are 42 units operating worldwide. Petrobras of Brazil has recently signed a contract for a Koppers-Totzek gasifier for ammonia production. Table 2.15 shows that the daily ammonia capacity of KT plants in operation today is in the range of 4,000 t/day which represents 85-90% of the world's coal-based ammonia production.[21] Koppers Company, Inc. of Pittsburgh was the licensor of the KT process in the U.S. until last year. However, it now operates independently of Krupp-Koppers of West Germany, and is trying to market the KT process as a Koppers gasifier.

The International Coal Refining Company has selected the Koppers-Totzek process for gasifying the solids residue from the SRC-I coal liquefaction process for hydrogen generation. Preliminary tests conducted on samples of 90% Kerr-McGee ash concentrate/10% Kentucky #9 coal, and 65% filter cake/35% Kentucky #9 coal have been successful.[22] Carbon conversion greater than 90% was achieved at O_2/carbon ratios ranging from 0.9 to 1.1.

2.3.1.2 Koppers-Totzek Gasification Process Flow Diagram

Figure 2.22 shows the design of a KT gasifier with two opposed heads, the so called two-headed gasifier. Larger modules are of the four-headed type with four heads 90° apart. Six four-headed units are installed in plants in India. At present, gasifiers of this type are available for the production of 50,000 standard cubic meters (1.8×10^6 scf) of raw gas per gasifier an hour. Larger capacities can be designed.

A mixture of coal dust and oxygen enters the gasifier from each head. The coal particles are gasified completely in about one second. After being ignited by heat radiation from the reactor walls, the coal reacts while forming a flame with a core temperature of more than 2,000°C (3600°F). The temperature of the gas mixture in the center of the gasifier normally is 1,500°-1,600°C (2700-2900°F). The gasifier is operated under very slightly elevated pressure.

Part of the ash flows down as liquid slag to the bottom, leaving the gasifier. The other part of the ash leaves the gasifier at the top, as fine-grained dust, together with crude gas.

Table 2.15 Ammonia plants in operation, based on the direct gasification of coal-status as of January 1, 1979

Operator and location of plant	Year of initial operation	NH_3 output in tons/day		
		Winkler	Koppers-Totzek	Lurgi
Azot Gorazke, Yugoslavia	1953	50		
Azot Sanayii, Kutahya, Turkey	1959	100		
Nitrogenous Fertilizer, Ptolemais, Greece	1959		270	
Neyveli, South Arcot, India	1960	280		
Chemical Fertilizer Mae Moh, Lampane, Thailand	1963		100	
Sasol One Ltd. Sasolburg, South Africa	1963			200
Azot Sanayii, Kutahya, Turkey	1966		340	
Industrial Development Corp., Kafue, Lusaka, Zambia	1966		100	
Fertilizer Corp. of India (FCI): Ramagundam, India	1969		900	
FCI, Werk Talcher, India	1970		900	
Nitrogenous Fertilizer, Ptolemais, Greece	1970		135	
AECI Ltd., Modderfontein, Republic of South Africa	1972		1,000	
Industrial Development Corp., Kafue, Lusaka, Zambia	1974		200	
Total		430	3,945	200

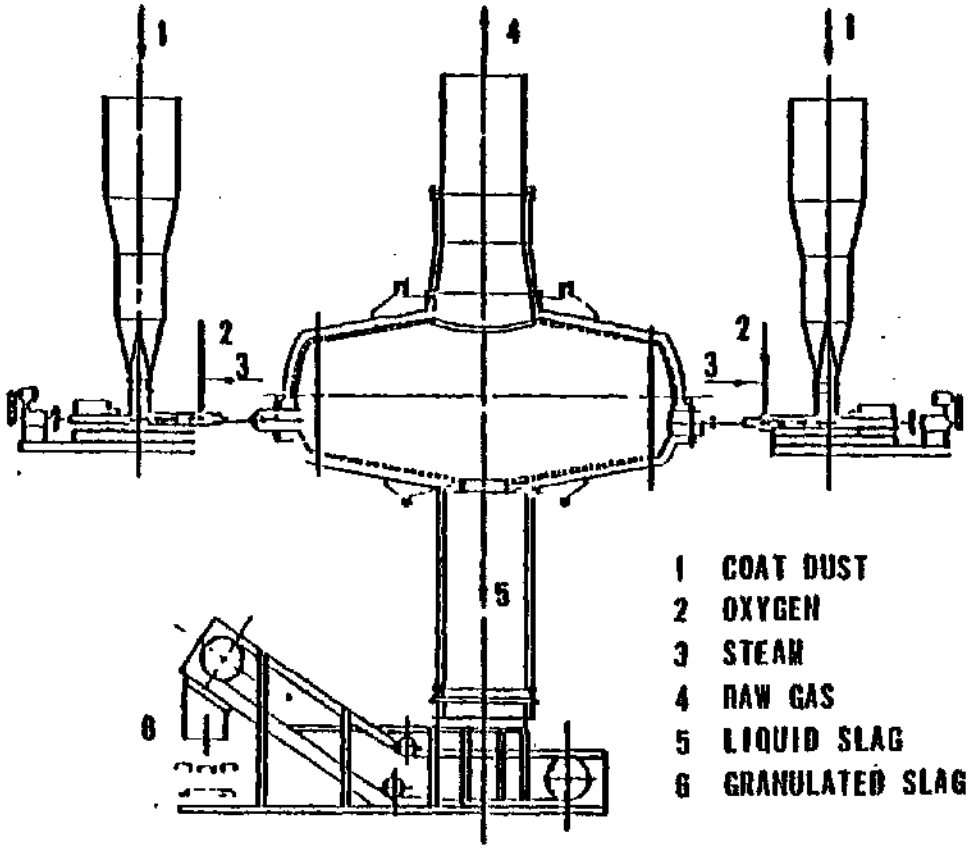

Figure 2.22

DESIGN OF "TWO-HEADED" KOPPERS-TOTZEK GASIFIER

The liquid slag, running down from the gasifier, drops into a water bath where it is granulated and discharged by a scraping conveyor. The solidified slag, with a size of about 5 to 10 mm (0.2 to 0.4 in), is free from carbon and can be used as filling materials for roads. Depending on its chemical composition, the slag may also be used for the manufacture of cement.

As shown in Figure 2.23, the hot raw gas leaves the gasifier together with some very fine ash dust containing small amounts of uncoverted carbon. In a waste heat boiler the raw gas is cooled below 300°C (570°F) by producing high pressure steam up to 10 MPa (1450 psi). At present, six such KT gasifiers with waste heat boilers for 10 MPa (1450 psi) steam are operating in India.

Raw gas coming from the waste heat boiler is led to a wash cooler in which it is cooled by direct water spraying. Simultaneously, most of the dust is removed. Thereafter, it is washed again with water in a mechanical washer, a so-called disintegrator. After this treatment the gas is available at approximately 10 mg of dust per standard cubic meter (0.004 grain per standard cubic foot).

This purity is sufficient for a number of applications. By adding an electrostatic precipitator, purities below 0.1 mg/m^3 (4×10^{-5} grain/ft^3) can be attained, so that all requirements for utilization of the gas can be met.

In the latest design the scrubbers will be replaced by dry cyclones.

The entrained dust is freed from the wash water in settling basins and, via a cooling tower, the wash water is recycled to the plant. The settled ash, in form of a sludge, is pumped to the disposal area.

High-pressure steam recovered from the raw gas by the waste heat boiler is utilized for driving steam turbines or within the framework of the integrated plant.[21]

2.3.1.3 Feed Requirements

As claimed by Krupp-Koppers, a broad variety of feedstocks can be gasified, ranging from lignite to anthracite as well as petroleum coke, charcoal and tars. Heavy residues from crude distillation have been gasified either in commercial operation or in large-scale test programs. The entire mine output of coal can be utilized and caking

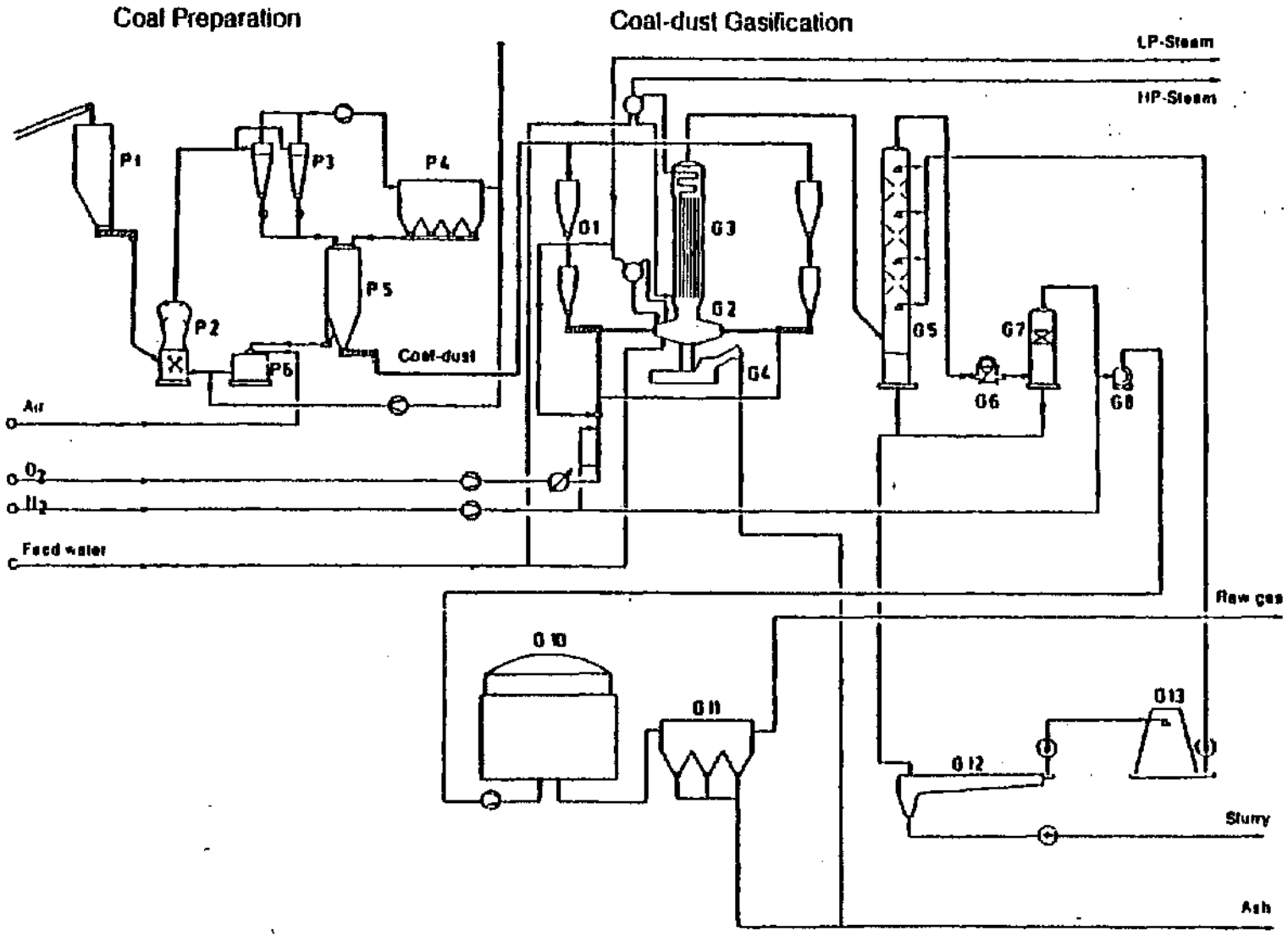

P1 Raw coal bunker
P2 5-filar mill
P3 Cyclone separator
P4 Electrostatic precipitator
P5 Coal-dust bunker
P6 Hot gas producer

G1 Dust bunker system
G2 Gasifier
G3 Waste heat boiler system
G4 Ash extractor
G5 Cooling washer
G6 Disintegrator

G7 Final cooler
G8 Gas seal pot
G9 Gas blower
G10 Gas holder
G11 Electrostatic precipitator

G12 Wash water settling tank
G13 Wash water cooling tower

Figure 2.23

RAW GAS PRODUCTION BY KOPPERS-TOTZEK GASIFICATION

properties of coal do not limit the use of caking coals. For coals with high ash fusion temperatures [>1500°C (>2700°F)], a fluxing agent such as limestone is added. Coal is sized to 70 to 90% passing through 200 mesh size screen. The moisture content is reduced to 2% by drying, although up to 8% moisture content be tolerated for coals with high initial moisture content.[23,24]

2.3.1.4 Reactants

Oxygen = 0.8-0.9 kg/kg coal (0.8-0.9 lb/lb coal)
Steam = 0.3-0.35 kg/kg coal (0.3-0.35 lb/lb coal)

2.3.1.5 Gas Composition

For a typical bituminous coal, the gas composition[25] is

	Vol %
H_2	32.10
CO	55.00
CO_2	10.50
CH_4	0.10
N_2 + Ar	1.90
H_2S/COS	0.40

2.3.1.6 Efficiency

Overall thermal efficiency = 86-90%
Cold gas efficiency = 73 to 76%
Carbon conversion >95%

2.3.1.7 Environmental Aspects

A mild environmental impact can be expected from the KT process. The requirements for both process and cooling water will be minimized by latest design changes (e.g., the use of dry cyclones to replace scrubbers for particulate removal). The raw gas does not contain any tars, hydrocarbons, or phenols. The only by-products from the process are elemental sulfur, fly ash and a non-leachable and inert slag. The slag is mostly carbon-free and ash-dust collected in the cyclones contains small amounts of ungasified carbon.

2.3.1.8 Equipment Design of Commercial Plants with Key Problems and Points of Emphasis for Operation

The operating experience of the following three plants will be discussed:

1. The coal-based, 1000 t/day ammonia plant of AECI Ltd. at Modderfontein, South Africa. The plant was commissioned in 1974.
2. The coal-based, 900 t/day ammonia plant of the Fertilizer Corporation of India at Talcher in the State of Orissa. The plant was commissioned in 1979.
3. The coal-based, 900 t/day ammonia plant of the Fertilizer Corporation of India at Ramagundam in Andhra Pradesh. The plant was commissioned in 1979.

K-T Plant at AECI Ltd., Modderfontein, South Africa

The plant has six two-headed gasifiers. As shown in Figure 2.24, the plant is made up of single, double, and multistream units, either because of the expected low reliability of certain units due to coal-related problems, or because the use of fewer streams would have resulted in size scale-up well beyond the range of tried and proven equipment existing at that time.

The plant is designed for stable operation down to 50% of design rate. Thus any difficulties with a steam boiler, a coal mill, a gas cleaning electrostatic precipitator, or a gas compressor would result in a period of reduced rate of operation rather than a total shutdown.

In the light of Krupp-Koppers plant operating experience, the provision of two units of boilers, electrostatic precipitators, and gas compressors is regarded as both prudent and economically justified. The reliability of a coal-fired boiler does not approach that of one fired with gas. Similarly, the mechanical reliability of the electrostatic precipitators and of the gas compressors, which are subject to solids fouling, is not adequate to justify single-stream units.

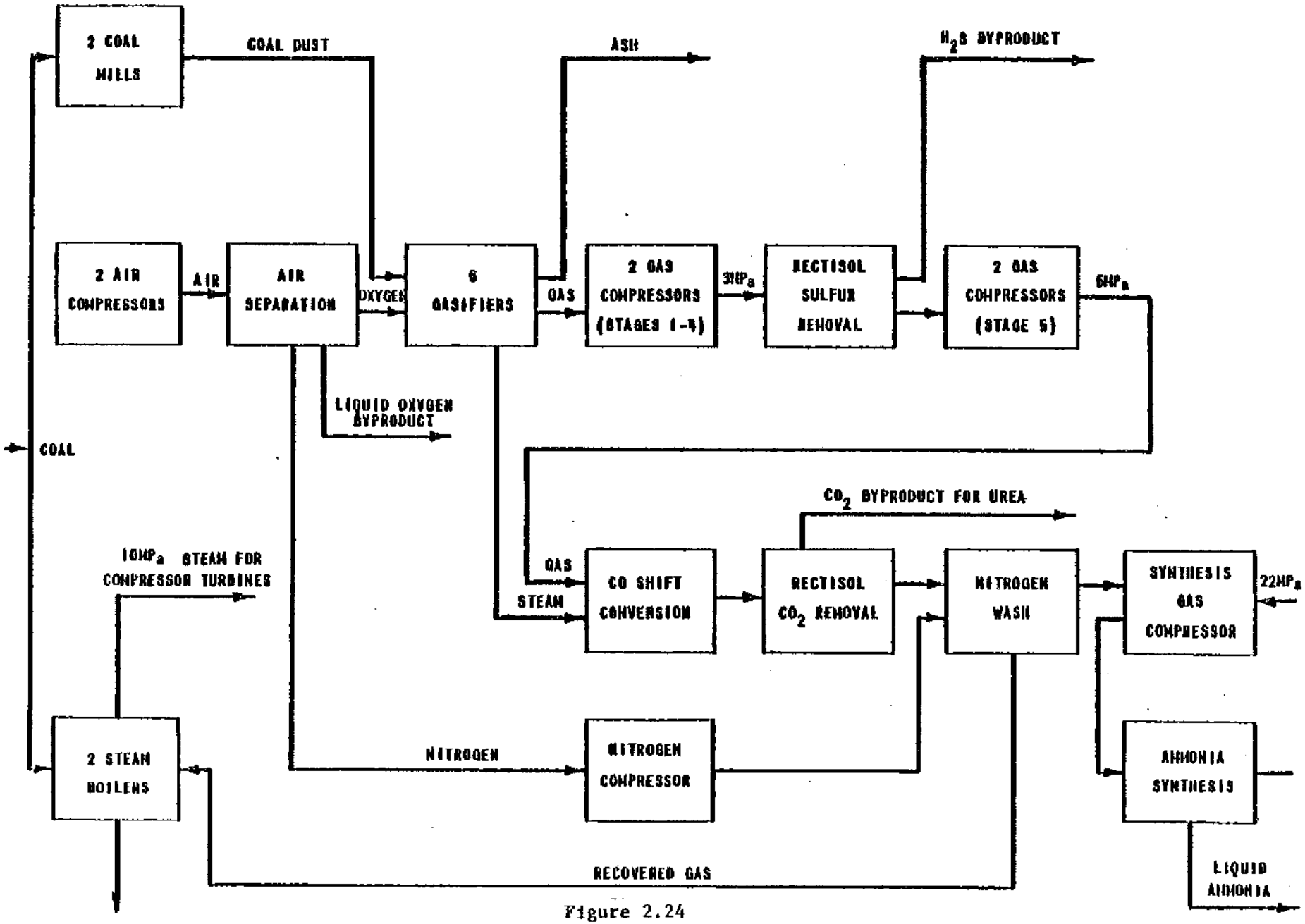

Figure 2.24
AMMONIA PLANT PROCESS FLOW SCHEME

Six two-headed gasifiers were installed to achieve rated output since, at the time the plant was designed, no operating experience existed for the high-capacity four-headed gasifiers.

Although full design output has been achieved with five gasifiers for a limited period, it has proved difficult to operate at sustained design rates under these conditions. In retrospect, the provision of a spare gasifier would have been advantageous in order to allow scheduled gasifier maintenance without reducing overall plant rate.[23,26]

Coal Preparation - A simplified version of the coal preparation unit as designed is shown in Figure 2.25. Coal is fed via a variable speed belt into a ring and ball mill. The milled coal is then conveyed from the mill, and at the same time dried to 1 percent moisture by a circulating stream of hot flue gas from the coal-fired boilers. Coal dust is removed from the gas stream by cyclones, with final cleaning of the circulating gas by electrostatic precipitators. Two 60-percent units are installed. The coal preparation power requirement includes 2 fans at 930 kW and the ball mills 1120 kW.[27]

After approximately two months of intermittent operation, severe erosion of the armored impeller and casing of the circulating gas fan was discovered. Investigation showed this to be due to excessive quantities of grit contained in the flue gas from the boilers due to the very poor efficiency of the grit extractors provided. However, discussion with the fan supplier revealed that excessive impeller wear would still occur unless dust loadings were reduced to less than 150 mg/m^3 (0.07 $grain/ft^3$). Since this could not be achieved by mechanical separation, major design changes were made to enable the flue gas to be taken from downstream of the boiler electrostatic precipitators.[23]

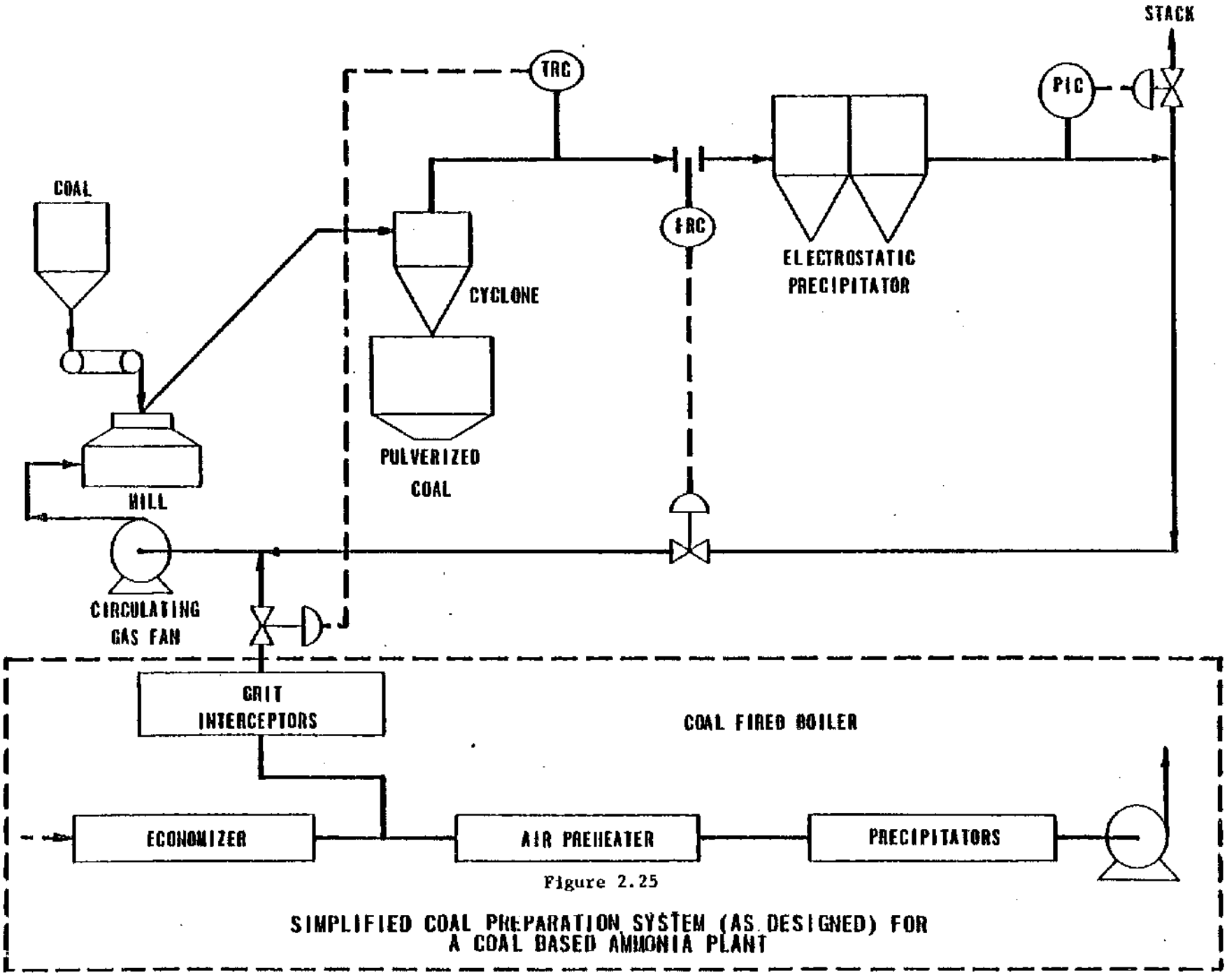

Figure 2.25

SIMPLIFIED COAL PREPARATION SYSTEM (AS DESIGNED) FOR A COAL BASED AMMONIA PLANT

Dust explosions are a major hazard on a unit of this type, particularly since the electrostatic precipitators provide a constant source of ignition. Two explosions have occured in the precipitators due to oxygen ingress following the failure of canvas compensators, subsequently replaced by stainless steel bellows. In each case, the precipitators safely vented by means of a pressure sensing device actuating a system of explosion vents normally held closed by explosive bolts. It has been calculated that this system will limit the pressure in the precipitators to 6.9 kPa (1 psi) in the event of an explosion, compared to their maximum design pressure of 12.4 kPa (1.8 psi).[23]

Gasifiers - A simplified arrangement of a gasifier and its waste heat boilers is shown in Figure 2.26. Coal dust is fed by four screw feeders into blowpipes. An oxygen/steam mixture is introduced at the end of the screw feeders and conveys the coal dust at high velocity through the blowpipes into the gasifier, where the mixture ignites, and the partial oxidation reactions take place. The gasifiers operate at slightly above atmospheric pressure and about 1,600°C (2900°F). The ash in the coal melts and part of it flows downwards as a molten slag into a water bath beneath the gasifier. Most of the ash passes up with the gas through a top outlet, where quench water is injected to reduce the temperature, causing the ash to re-solidify. The gas then passes through a radiant boiler and two tubular boilers in parallel, which generates steam at 5.4 MPa (780 psi). Ash is then removed from the gas in a water wash tower.[23]

A gasifier will operate safely provided:

1. A steady flow of coal dust from the feeders and a steady flow of oxygen to the blowpipe is maintained.

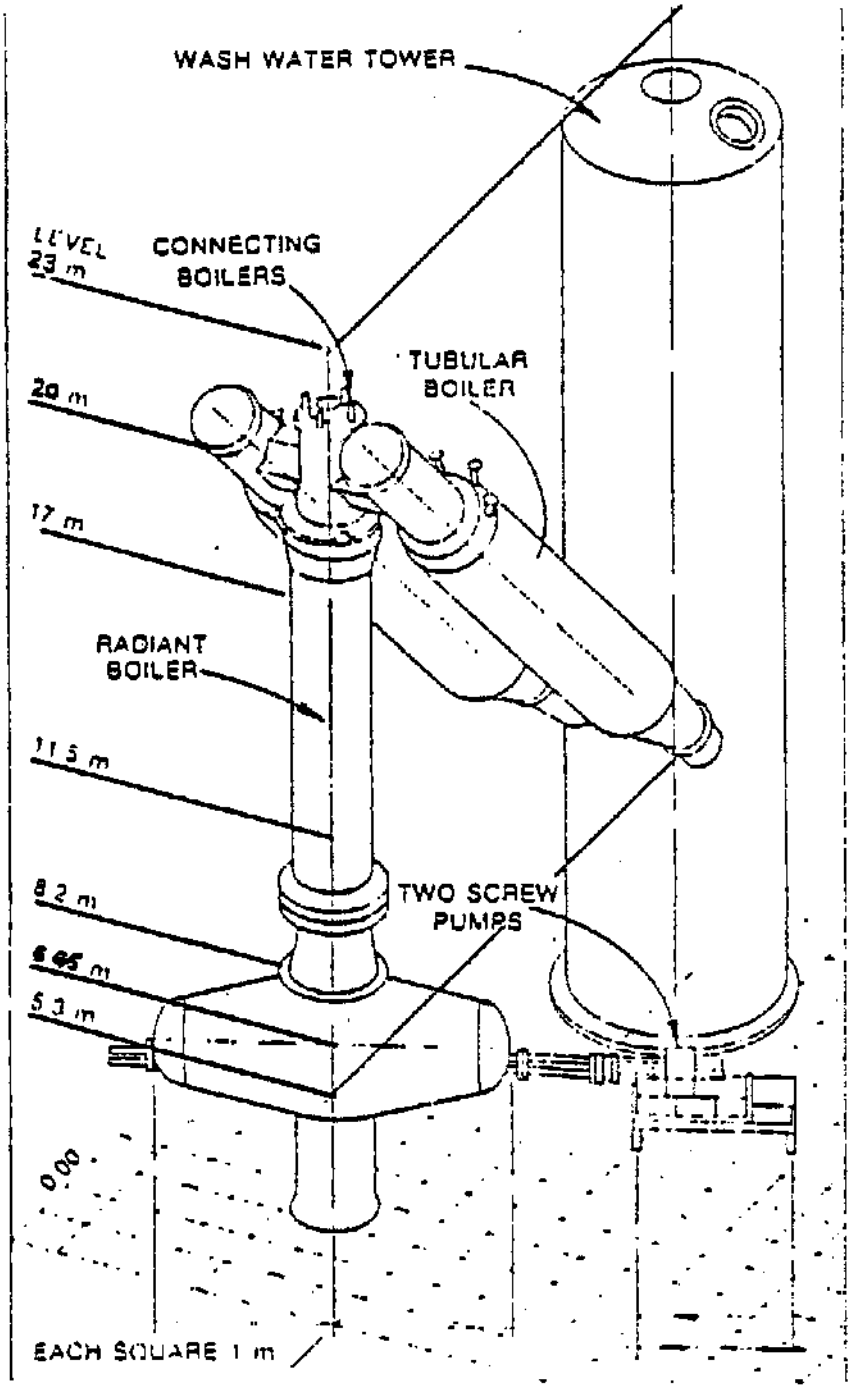

Figure 2.26

GENERAL LAYOUT OF KOPPERS-TOTZEK GASIFIER FOR SYNTHESIS GAS FROM COAL

2. The velocity of oxygen/dust mixture in the blowpipe is sufficient to prevent "burn back".

3. Screw feeders are kept supplied with coal dust, enabling a plug of pulverized coal to be maintained at the end of the screw feeders, preventing back flow of oxygen into the coal dust feed bunker.

During operation, the blowpipe pressures, screw feeder speeds, oxygen flow rates and dust bunker levels are monitored. If any of these parameters deviates outside prescribed limits, the gasifier is automatically shut down. Altogether there are 28 parameters which can cause a gasifier to trip. Many spurious trips of gasifiers occured, the most common cause of these being failure of dust bunker level detectors.

When a gasifier is shut down or tripped, oxygen to the blowpipes is shut off, the screw feeders are stopped and the blowpipes are automatically flushed with nitrogen.

On one occasion an explosion occurred immediately after a gasifier had been tripped. Fortunately, damage was confined to the wash water tower. It was established that the explosion was caused by failure of the oxygen trip valves to completely stop the flow of oxygen into the gasifier. This occurred even though two quick-closing oxygen isolation valves in series, with a trip-open vent valve between them, had been provided.

The oxygen isolation valves supplied were butterfly valves with a rubber sealing ring mounted in the disc. Tests showed that these valves could not be relied upon to isolate completely because the rubber sealing ring near the butterfly shaft tended to jam, preventing full travel of the butterfly. This problem was aggravated by the fact that materials suitable for oxygen at 100°C (212°F) are generally not true elastomers and tend to deform permanently under stress.

The two basic requirements for an oxygen isolation valve in this service are that it must close quickly and that it must not leak.

These requirements are met by valves employing eccentrically rotating spherical plugs, with flexible arms connecting the plug to the rotating shaft. Positive seal between plug and seat is achieved by elastic deformation of the arms.[23]

The gas produced from the gasifiers contains about 58 percent CO, and even minor leaks in the plant have led to personnel being affected by CO.

To avoid high concentrations of explosive or toxic gases near ground level, the startup vents, which all release gases at near ambient temperature, discharge to high-level flares.

The raw gas compressors have been prone to leakage from casing joints, seals and lute vessels. Modifications have been made to the sealing system and the lutes and, to further reduce danger to personnel in this area, installation of a CO infrared analyzer which will monitor at 10 points in the area was planned. Two additional points will continually monitor bottles of zero- and full-range gas.

The electrostatic precipitators for removal of ash from raw gas were provided with low-level atmospheric vents. These vents had been used on several occasions, without incident, for purging the precipitators with gas prior to startup. When these vents were used on a still, cold night, with severe temperature inversion conditions, gas released did not rise or disperse. Under these extremely unusual weather conditions, a laboratory assistant taking a sample from the top of the precipitator was overcome by CO and fatally gassed.

This unfortunate incident led to a complete review of all vents on the plant and modifications have been made to avoid venting any significant quantities of gas without flaring or dispersing. This

applied particularly to gases which are at ambient temperature or cooler.[23]

Where large sections of the plant or critical plant items are required to be shut down on detection of a parameter outside safe limits, two-out-of-three detection arrangements of sensors have been used. For example, the oxygen concentration of the combined gas stream from the gasifiers is monitored by three oxygen analyzers. Any two of these measuring greater than 0.5 percent O_2 will cause all the gasifiers to be shut down.

Similarly, other critical parameters, such as low instrument air pressure, low cooling water pressure, compressor axial displacement and high thrust-bearing temperatures, which would cause a major disruption in production in the event of the failure of a single sensing element, are monitored by detection systems. Apart from the virtual elimination of spurious trips due to instrument failure, a tenfold reduction in the probability of failure on demand is achieved.[23]

The main parameters used to control the condition of the gasifier are coal feed rate (adjusted by varying the speed of the screw feeders), oxygen rate and steam rate. These rates are manually adjusted on the basis of CO_2 content of the raw gas, production of 170 kPa (25 psi) steam from the water jacket surrounding the body of the gasifier (which reflects the internal temperature of the gasifier) and a visual observation of the color and viscosity of the slag within the gasifier base.

Only infrequent adjustments to gasifier rates are required, and the six gasifiers, together with the coal preparation unit and other ancillaries, are supervised by one control room operator. Two outside operators work on the gasification structure, with a third outside operator looking after ancillaries such as oxygen and nitrogen blowers, the ash settling ponds and raw gas electrostatic precipitators.

Efficiency is very much a function of the temperature at which the gasifier is operated, and to a lesser extent of coal particle size and steam injection rate.

The design carbon conversion efficiency of 88 percent has not yet been achieved, due to the problems experienced with refractory linings. However, gas composition and output from each gasifier has been very close to design. It should be emphasized that no detectable amounts of hydrocarbon or coal distillation products are produced.

Dust removal from the raw gas is effected in three stages. Gas leaving the gasifier passes to a washer cooler, where it is contacted with wash water, reducing the dust loading from 140 g/m^3 (60 $grains/ft^3$) to 11.4 g/m^3 (5 $grains/ft^3$). It then passes to two disintegrators, which can be described as one "treadwheel" rotating inside a fixed outer treadwheel. Wash water is sprayed onto the wheels, reducing the dust burden to 10 mg/m^3 (0.004 $grain/ft^3$). The gas passes via raw gas blowers and gasholder to an electrostatic precipitator, again flushed with water, where the dust burden is finally reduced to less than 0.15 mg/m^3 (0.00006 $grain/ft^3$). The wash water is recirculated via a settling system, producing a 25 percent ash slurry for transfer to slimes dams.

Dust bunker level probes supplied with the plant were of the "capacitance" type. These operate on the principle that dust surrounding the probe will have a higher dielectric constant than the nitrogen in the bunker. The resultant change in capacitance of the system can be detected electronically. These probes have been employed on plants using lignite dust successfully, but it was found that they do not operate reliably on coal dust. Modifications were to be made to give an improvement in performance.

An alternative level detecting device is the "tuning fork" probe, in which a fork vibrating at about 80 cycles per second is suspended in the dust bunkers. Damping of the vibration by the dust is detected electronically. Tests with these probes in coal dust bunkers have been encouraging, and may provide a better solution to the problem of detecting dust bunker levels.[23]

The radiant and tubular boilers are connected by three tangent tube boilers, which also raise steam at 5.4 MPa (780 psi). The gas passing through this system undergoes a change in direction, causing the ash particles to impinge on boiler tubes. The ash, consisting mainly of SiO_2 and Al_2O_3 is abrasive and has caused tube failures in the tangent tube boilers as a resulting of thinning. Failure of a 5.4 MPa (780 psi) boiler tube in the gasifier is hazardous because it can cause large quantities of gas to be blown from the water seals beneath the gasifier and water wash tower. The worst affected boiler tube areas were being eroded at the rate of 4.75 mm (0.2 in) of tube thickness per 1,000 hours of operation. Fortunately, the erosion is localized and arrested by installing protecting plates made of 310 stainless steel. As a trial the tangent tube surfaces on one set of boilers were coated with an abrasion resistant alumina material, and results so far are promising.[23]

The Koppers-Totzek gasifiers have a 40-mm (1.6 in) thick lining of refractory material upon which molten slag accumulates during operation and runs down to flow from the base slag outlet. During the first months of operation, appreciable loss of the refractory lining, due to molten slag attack, was found to occur.

To minimize the slag attack, the gasifiers were operated at lower temperatures by reducing the oxygen-to-coal ratio. Although reduction of the oxygen-to-coal ratio reduces the coal conversion, this was deliberately accepted as a temporary measure. Under these conditions the gasifiers could probably have been operated indefinitely without further refractory loss.

Koppers-Totzek plants in locations such as Greece and Turkey have operated for a number of years with the same refractory lining systems as that installed at Modderfontein without loss of linings.

The difference in the case of Modderfontein was coal-related; because of the lower reactivity of the South African coal, achieving reasonable coal conversion required considerably higher operating temperatures than in the previous cases.

The coal used in commissioning the plant was a bituminous mix smalls product of two collieries in the Witbank area of South Africa (Albion and New Clydesdale). These coals have ash flow temperatures of about 1,375 to 1,390°C (2500 to 2535°F). This is considerably lower than the required gasifier outlet temperature of 1,550 to 1,600°C (2820 to 2900°F), which resulted in the slag contacting the gasifier lining in a highly fluid state.

The cooling system and refractory lining were not designed for these conditions; hence, a stable, frozen slag layer was not established and loss of refractory resulted. Under conditions of contact with molten slag over periods of a number of years, and under the high operating temperatures encountered in the gasifiers, the principle of a stable layer of frozen slag on the refractory lining remained the only viable solution to the problem of refractory loss.

The design of a gasifier wall is as follows. Steel pins are resistance-welded to the gasifier wall and extend into the refractory. These serve the dual purpose of refractory support and enhancement of the conduction of heat through the wall. Heat is conducted through a multilayer system of flowing molten slag, frozen solid slag, refractory with pins, and finally the steel wall into the outer shell containing boiling water.

Redesign of the refractory lining system as applied at Modderfontein was required to suit the operating conditions. Following the suggestion of the licensors, the redesign basically involved reducing the spacing between pins until the effective thermal conductivity of the refractory/pin composite produced enough cooling to establish a stable solid slag layer under all operating conditions. An investigation into alternative

refractory materials had identified an alumina-based plastic ramming material as more suitable than the original chrome castable refractory.

The steel pins complicated the analysis of wall heat transfer in that a three-dimensional heat transfer analysis was required for the composite lining of refractory and pins. Both three-dimensional and two-dimensional heat transfer models were developed and computerized to assist in redesign of the lining. The results of this investigation confirmed that the reduced pin spacing was the most important improvement.

The gasifiers were all relined during 1977 and have been on line for over 2 years with very little deterioration in the condition of the linings.[23,26]

Continuous CO_2 analysis of the gasifier effluent gas has presented a difficult sample problem in coping with the wet-dust laden stream.

Originally, the sample was withdrawn after the washer cooler at a temperature of about 35°C (95°F), via a catchpot and filter to the suction of the sample pump and then delivered to the IR analyzer.

Various solutions to the problem of line and filter choking were tried, including eduction of the sample by means of water injection at the top of the vertical sample leg. Apart from not providing a complete answer to the filter problem, difficulties were encountered with the absorption of CO_2 by the injected water.

A steam-jacketed cyclone followed by refrigeration and water knockout prior to warming up and final filtration through a 2 micron filter was planned to overcome this problem.[23]

Environmental Aspects - The high operating temperatures of the Koppers gasifiers results in gas containing only about 0.1 percent methane and no detectable amounts of higher hydrocarbons or coal distillation products. This is an advantage in view of the strict effluent controls in force at the Modderfontein Factory.

Hydrogen cyanide is present in the gas stream in small amounts, said to be dependent upon the ash composition. For the coal in use at Modderfontein, up to 40 ppm v/v of HCN is found in the gas produced. This is removed by scrubbing with water, the bottoms stream from the scrubber then passing with the wash water to the slimes dams. The coal ash contains about 17 percent Fe_2O_3. HCN reacts with this iron so that the water from the slimes dams contains less than 1 ppm of HCN.

The slimes dams prove equally effective in removing the traces of ammonia absorbed from the raw gas by the circulating wash water, the dam effluent containing a maximum of 15 ppm v/v of ammonia.

Combustible sulfur in the coal appears as H_2S and COS in the raw gas. A by-product gas containing up to 85 percent H_2S and COS is produced from the Rectisol desulfurization unit. This gas was burned in a nearby sulfuric acid plant pyrite roaster. The sulfuric acid plant was closed and a Claus sulfur recovery system has been considered.[23,24,26,28]

K-T Plant At Talcher, India

The three gasifiers at the plant have a capacity to produce 900 t/day of ammonia. The gasifiers are four-headed, each head having two burners. Each gasifier is 7,900 mm (26 ft) in length, 7,900 mm (26 ft) in width and 7,805 mm (26 ft) in height and has a capacity to produce about 35,000 m^3/h (1.24×10^6 ft^3/hr) of raw gas having $CO + H_2$ content of about 86%.[28]

All three gasifiers have been commissioned. Gasifier No. 1 has been run for a total of 410 hours, No. 2 for a period of 244 hours and No. 3 for 112 hours. A continuous uninterrupted plant run of 76 hours was achieved as of March 1979.

During the start-up and commissioning of the first gasifier there were a number of problems and the gasifier was started with coal 50 times. However, from the experience gained in running the first gasifier, many of these problems could be solved which resulted in fewer problems in operating the second and third gasifiers. A comparison of occurrence of various problems faced in operating the first, second, and third gasifiers are shown in Table 2.16.

Table 2.16 Problems encountered with gasifiers at Talcher

	Gasifier No. 1	Gasifier No. II	Gasifier No. III
Instrument problems	6	3	1
Screw jamming due to high moisture in coal dust	5	5	-
Back-firing of coal flame into blow pipes	9	-	-
High base pressure of gasifier	6	-	-
Low level in waste heat boiler drum	4	-	1
Nonsupply of coal dust	5	-	-
Electrical problems	1	2	-
Low cooling water pressure	2	-	-
Other causes like non-availability of N_2 and O_2, power failures, boiler tube leakage, etc.	12	6	4
Total	50	16	6

The operating parameters[28] achieved at Talcher vis-a-vis the normal operating parameters with corresponding raw gas composition, coal dust analysis, ash characterisitics, etc. are given in Table 2.17.

Table 2.17 Operating data for gasifiers at Talcher

	Actual	Design maximum	Normal
Coal feed, t/hr	22-27	24.60	21.98
Oxygen flow, m^3/hr (ft^3/hr)	12,000 (424,000)	13,604 (480,000)	12,146 (430,000)
Oxygen pressure, kPa (psi)	50 (7.3)	60 (8.7)	60 (8.7)
Process steam flow, kg/hr (lb/hr)	3,000-4,000 (6,600-8,800)	4,400 (9,860)	4,344 (9,560)
Gasifier pressure, kPa (psi)	102-103 (14.8-14.9)	105 (15.2)	105 (15.2)
Raw gas flow, m^3/hr (outlet of blower) (ft^3/hr)	32,000-35,000 ($1.13-1.24 \times 10^6$)	36,484 (wet) (1.29×10^6)	35,926 (wet) (1.27×10^6)
Raw gas pressure, kPa (psi)	107 (15.5)	109 (15.8)	109 (15.8)
Raw gas temperature, °C (°F)	40 (104)	56 (133)	40 (104)
HP steam production, t/hr	18-22	26.241	23.57
LP steam production, t/hr	8-12	12.53	10.56
Raw gas temperature, °C (°F)			
Inlet waste heat boiler	800-860 (1470-1580)	900 (1650)	900 (1650)
Inlet to evaporator	650-700 (1200-1290)	714 (1320)	714 (1320)
Inlet to economizer	550-570 (1020-1060)	527 (980)	527 (980)
Outlet of waste heat boiler	350-400 (660-750)	300 (570)	300 (570)
Average raw gas composition, vol %			
CO_2	10-14	14.64	12.59
CO	54-57	55.78	57.2
H_2	27-32	27.65	28.58
CH_4	0.2-0.4	0.10	0.10
N_2 + Ar	0.4-3.8	1.83	1.71

Table 2.17 (continued)

	Actual	Design maximum	Normal
Coal dust analysis (dry basis), wt %			
C	55-60	64.4	64.4
H	3-4	4.26	4.26
O	8-9.7	10.19	10.19
Ash	23.5-32	19.20	19.20
Sulfur	0.4-0.8	0.59	0.59
N	1.1-1.3	1.36	1.36
Coal dust			
Microns μm	93% below 90	90% below 90	90% below 90
Moisture, wt %	2-3	1.0	1.0
Limestone, wt %	2	2.5	
Ash analysis, wt %			
Fe_2O_3	11.92	8.5	
SiO_2	61.24	57.8	
Al_2O_3	18.32	29.0	
CaO	5.40	1.0	
MgO	1.38	1.2	
K_2O	-	0.54	
Na_2O	-	0.16	
SO_3	-	0.60	
TiO_2	1.50	-	
Ash from ash extractor, t/hr	Not measured	3.968	2.447
Ash fusion characteristics			
Softening point, °C (°F)	1,260 (2,300)	1,200 (2,190)	
Hemisphere point, °C (°F)	1,340 (2,440)	1,360 (2,480)	
Flow point, °C (°F)	1,430 (2,610)	Above 1,550 (2,820)	

Note: However, over and above the maximal case, the plant has been designed to handle coal with 30% ash and to produce 15% extra raw gas subject to maximum oxygen consumption of 14,000 m^3/hr (494,000 ft^3/hr).

During running of the gasifier some problems were faced which required modifications of or improvements to the existing system; these are enumerated below.

Coal Preparation - Coal is fed to the gasifiers from the service bunker through a Bailey feeder and feed bunker. For determining the coal level in the feed service bunkers, capacitance probes were provided. During operation it was found that with variation of coal quality, such as coal particle size and moisture content in the coal, the dielectric constant of coal dust undergoes changes which result in the deviation of preselected level point in the bunker. In order to overcome this problem, the surface at the end of the probe was increased by providing four vanes at the end of the probe. With this modification, the performance of the probes improved considerably. Also as an experimental measure, nuclear devices have now been provided for determining the coal dust level in the feed bunker on one of the gasifiers. The performance of this device has yet to be established.[28]

The service bunkers are provided with load cells. Normally the coal feed to the gasifier can be determined from the rotational speed of the screws. From experience it was found that the coal feed was not uniform, though the speed of the various screws was kept the same. Thus, it was not possible to determine exactly the coal flow to the gasifier. In order to ascertain the coal feed rate, a weight recorder has now been provided to record the weight loss of the service bunker during operation.[28]

Gasifiers - In the initial stages of operation of the gasifier, coal dust was fed without addition of flux (limestone), even though provision had been made for such an addition, in order to produce low melting slag which would build up a protective layer on the refractory lining. However, this resulted in frequent choking of the gasifier neck (gas outlet from the gasifier) and also formation of lump slag. Formation of lump slag resulted in damage to the ash extractor.[28]

After formation of a protective layer over the refractory was achieved, 2% limestone was added and there was no further deposition of fly ash in the gasifier neck.

One important observation was that the moisture content in the coal dust being fed to the gasifier was about 2%-3% as against the normal content of 1%. Higher moisture content in the coal was resulting in blockage of the return nitrogen line and blowing of the rupture disc (safety device) in the service bunker. Nitrogen is used for transportation of coal dust from the coal grinding plant to the service bunkers and nitrogen from the service bunker is sent to the atmosphere through a bag dust filter. Higher moisture content in the coal created problems in the transfer of coal dust from the service bunker to the feed bunker through the Bailey feeder and also jamming of the coal dust screws. Remedial action has been taken to reduce the moisture content in the feed coal to the grinding mill and also to prevent deposition of the moisture in the transportation line by maintaining higher temperature through steam tracing of the transport line.[28]

The coal dust/oxygen feed to the gasifier is fed through a blow pipe which is fixed at the end of the screw conveyor. A number of times during operation of the gasifiers back-firing in the blow pipes occurred. This resulted in several emergency stoppages of the gasifiers.

It was observed that this was due to higher percentage of fines in the coal dust, which was the result of operating the coal grinding mills at lower loads. The powdered coal with higher fines content, when fed to the screw conveyor, was in excess of that expected for a particular speed of the screw. This resulted in supression of the preadjusted oxygen flow, thereby reducing the velocity of the feed through the blow pipes. Back-firing occurred when the velocity into the burner became less than the ignition velocity of the coal/oxygen mixture. The coal dust burner diameter has been reduced to increase the blowing velocity.[28]

Provision was made to trip only one pair of the opposite burners in the gasifiers in case of an emergency. However, it was observed that during tripping of any one pair of burners, the other pair was also tripped, due to an instantaneous reduction in the gas flow and the resulting low base pressure in the system. In the event of a lower gas flow, the discharge flapper provided at the suction of the raw gas blower draws less gas. However, the closing operation of this flapper was not fast enough to prevent the entire gasifier from tripping due to the low system pressure. A time relay was interposed to allow a reasonable time for operation of the controller of the gas suction flapper to react before tripping the entire gasifier. It has since been found that the entire gasifier tripping could be avoided with such an arrangement, which provides the flexibility for restarting of the tripped pair of burners within a few minutes, thereby bringing back the entire gasifier into normal operation.[28]

During inspection of the gasifiers after some operation, it was observed that the surfaces of the economizer and evaporator coils of the waste heat boiler were getting unduly polished due to more frequent soot blowing than was envisaged. It was noticed that this has led to erosion of the tubes. In order to avoid this problem, the soot blowing steam pressure was reduced from 1.6 MPa (230 psi) to 1.0 MPa (145 psi). Even with the reduced blowing pressure, the soot blowing operation was found to be satisfactory. Further observations of the various operating parameters of the gasifiers are presently being made with a view to further reducing the frequency of soot blowing to that originally envisaged.

From the operating experience gained in running the gasifiers, no basic design problems have been observed, but there have been a number of teething troubles which have made it difficult to operate the gasifiers on a continuous basis for long periods. However, with the various modifications and alterations that have been made and with the experience already gained in operating the gasifiers, smooth operation of the gasifiers for longer periods should be possible.

K-T Plant at Ramagundam, India

As far as Ramagundam plant is concerned, two of the three gasifiers have been commissioned; one has been run for a total of 278 hours and the other for 159 hours (as of March 1979). A continuous uninterrupted run of 67 hours has been achieved.

During the start-up and commissioning of the first gasifier, a number of problems cropped up which were more or less similar to those faced at Talcher. The gasifier was started with coal 19 times. From the experience gained in running the first gasifier, many of these problems could be solved, which resulted in relatively fewer problems in operating the second gasifier. A comparative statement[28] of various problems faced is presented in Table 2.18.

Table 2.18 Problems encountered with gasifiers at Ramagundam

	Gasifier No. I	Gasifier No. II
Instrument problems	2	-
Screw jamming due to high moisture in coal dust	1	1
Bailey feeder shaft jamming	1	-
Choking of bubble shaft	-	2
Nonsupply of coal dust	3	-
Electrical problem	-	1
Low wash water pressure	2	-
Other causes like non-availability of N_2 and O_2, power failure, etc.	3	-
Stopped due to ash extractor plate coming out	1	-
Abrupt fall in waste heat boiler pressure (soot blower lancing tube broken)	1	-
Miscellaneous	3	-
Total	19	4

The operating parameters achieved versus the normal operating parameters[28] with corresponding raw gas compositions, coal dust analysis, ash characteristics, etc. are given in Table 2.19.

Table 2.19 Operating data for gasifiers at Ramagundam (March 31, 1979)

	Actual	Design maximum	Normal
Coal dust, kg/hr (lb/hr)	22,000-25,000 (48,400-55,000)	25,476 (wet) (56,050)	22,042 (wet) (48,490)
Oxygen flow, m^3/hr (ft^3/hr) (98% purity)	11, 250 (397,280)	12,818 (452,650)	11,208.7 (395,830)
Oxygen pressure, kPa (psi)	55 (8)	60 (9)	55 (8)
Process steam flow, kg/hr (lb/hr)	3,500-4,000 (7,700-8,800)	4,400 (9,680)	4,344 (9,557)
Gasifier pressure, kPa (psi)	104-105 (15.1-15.2)	107 (15.5)	107 (15.5)
Raw gas flow (outlet of raw gas blower), m^3/hr (ft^3/hr)	31,500 (1.11×10^6)	37,053 (1.31×10^6)	34,830 (1.23×10^6)
Raw gas temperature, °C (°F)	35 (95)	56 (133)	40 (104)
HP steam production, kg/hr (lb/hr)	20,800-24,000 (45,760-52,800)	27,342 (60,150)	24,398 (53,675)
LP steam production, t/hr	10-12.5	12,545	4,725
Raw gas temperature, °C (°F)			
Inlet waste heat boiler	800-860 (1,470-1,580)	1,100 (2,010)	900 (1,650)
Inlet to evaporator	740 (1,364)		
Inlet to economizer	550 (1,020)		
Outlet of waste heat boiler	350-380 (660-720)	400 (750)	350 (660)
Average raw gas composition (dry basis), vol %			
CO_2	11.0	14.75	12.92
CO	57.6	49.16	50.16
H_2	27.1	27.1	28.06
CH_4	0.2	0.09	0.09

Table 2.19 (continued)

	Actual	Design maximum	Normal
Coal dust analysis (dry basis), wt %			
C	59.97	59.57	50.71
H	4.01	3.95	4.01
O	12.04	12.26	12.44
Ash	22.36	23.48	22.36
Sulfur	0.24	0.23	0.24
N_2	1.38	1.37	1.38
Coal dust			
Size	86.5% below 0.09 mm	90% below 0.09 mm	-
Moisture, wt %	1-2	1	1
Ash analysis, wt %			
Fe_2O_3	5.07	5.39	
SiO_2	62.1	53.76	
Al_2O_3	19.13	24.78	
CaO	10.6	9.71	
MgO	1.79	1.0	
Na_2O	-	0.27	
SO_3	0.38	4.62	
P_2O_5	0.02	0.11	
Ash from ash extractor, kg/hr (lb/hr)	Not measured	3,212 (7,066)	2,593 (5,705)
Ash fusion characteristics			
Softening point, °C (°F)	1,210 (2,210)	1,290 (2,350)	
Hemisphere point, °C (°F)	1,310 (2,390)	1,450 (2,640)	
Flow point, °C (°F)	1,410 (2,570)	Above 1,550 (2,820)	

Note: However, over and above the maximal case, the plant has been designed to handle coal with 30% ash and to produce 15% extra raw gas subject to maximum oxygen consumption of 14,000 m^3/hr (494,400 ft^3/hr).

2.3.2 Shell-Koppers Process[F,V]

Shell-Koppers gasification is based on the principle of entrained bed gasification at elevated pressure and under slagging conditions. The gasifier can be utilized for hydrogen production in direct liquefaction processes. Also, development of this gasifier is to establish an indirect coal liquefaction system which will synthesize gasoline from the gas produced by the gasifier.

Possible applications of the process are: (1)CO-rich gas: medium Btu, combined-cycle systems, reducer gas; (2) synthesis gas: hydrocarbon synthesis, methanol, methyl fuel, SNG; (3) hydrogen:hydrogen manufacturing, ammonia.

2.3.2.1 History and Status

Shell Internationale Petroleum Maatschappij B.V., The Hague, The Netherlands, and Krupp-Koppers GmbH., Essen., West Germany, have been working together on the development of a high-pressure gasification process since the beginning of 1974. Shell has been operating a 6 t/day bench scale pilot plant at its Amsterdam Laboratories since December 1976. Following the successful operation of this plant, Shell decided to set up a 150 t/d pilot plant employing this process.[9,29]

The 150 t/d pilot plant was built at Shell's Hamburg refinery and has been operating since its commissioning in November 1978. The plant has been operated for a total of 760 hours during 30 experimental runs (as of March 1980). The maximum duration run was 240 hours which was terminated by fouling of the waste heat boiler as indicated by a high differential pressure. Consideration is being given to redesign of the waste heat boiler.

Although the plant has been built by Krupp-Koppers in cooperation with Shell process and project engineers in The Hague and Hamburg, it is the property of Deutsche Shell AG and is operated by that company. The capital and operating costs are expected to approach $50 million (1978-84).

Shell's scenario for further development is:[30,31]

- 1980-84: 1000 t/d plant at Moerdijk, near Rotterdam, The Netherlands. Gas is to be used in a gas turbine/combined cycle system including a waste heat boiler (WHB). A single gasifier will be used for this scale. Another gasification plant of the same size will be built in West Germany and is to be operational in 1985.
- 1984-1988: 2500 t/d gasifier in West Germany to make syngas and methanol without WHB.
- 1988 on: 2500 t/d commercial gasifiers.
- 4, 6, or 8 burner gasifiers are planned for development.

In conjunction with their Shell-Koppers gasifier program, Shell has developed two new indirect liquefaction processes. In one of these processes, shifted syngas is reacted over a synthetic zeolite/promoted-iron catalyst to form gasoline, LPG and diesel fuels. In the other, the syngas is converted directly over a proprietary catalyst without prior water gas shift. Conversion of the syngas in the reactor is such that recycle is not necessary. Shell is planning scale up of the processes to demonstration scale by 1990.[9]

2.3.2.2 Company Experience

The development of the 150 t/d pilot plant drew on the existing knowhow of the two associates in the venture. On the one hand, there was the technical knowhow and experience of Krupp-Koppers, who have built numerous coal gasification plants employing the Koppers-Totzek process working at atmospheric pressure, and on the other hand there was Shell's know-how obtained from the Shell oil gasification process, a high pressure process employed in many units operating around the world.

Shell interests in coal are looked after by Shell Coal International (SCI) in London (marketing aspects) and Shell Internationale Petroleum Maatschappij (SIPM) in the Hague (technical aspects). Research work is currently being undertaken by KSLA (Royal Shell Laboratories Amsterdam) for SIPM, though the Hamburg installation comes under Deutsche Shell.[32]

2.3.2.3 Plant Location

The 6 t/d bench scale pilot plant is located at Shell's Amsterdam Laboratories in The Netherlands. The 150 t/d pilot plant is located at Shell's Harburg refinery near Hamburg, West Germany.[9,34]

2.3.2.4 Shell-Koppers Gasification Process Flow

The flow scheme for the 150 t/d plant in Harburg, West Germany is shown in Figure 2. 27.

In a coal mill, coal is ground and dried and subsequently pneumatically transported to the atmospheric cyclone hoppers. Nitrogen from a liquid nitrogen storage vessel is used as a carrier gas for the coal. To transport the coal from the cyclone hoppers to the nitrogen pressurized feed hoppers, a fully automated lock hopper system is used. The pneumatic transport of the coal from the feed hoppers to the burners is again accomplished with nitrogen.

For good control of the process it is mandatory to be able to accurately measure the coal, oxygen and steam flows to the burners. The success of the pneumatic feed system has been made possible by the development of an accurate and dependable coal flow meter.

The reactor is equipped with two diametrically opposed burners and consists essentially of a pressure shell which is protected from the hot gases by a tube wall in which saturated steam of 5 MPa (725 psi) is raised. The tube wall is in turn protected by a thin layer of a refractory material. The slag which leaves the reactor via a hole in the bottom is quenched in water, crushed in a submerged mill and then depressurized in a lockhopper.

Objectives for the gasifier conditions are: (a) temperature, >1500°C (2700°F) with slagging; (b) pressure, 20 to 40 bars (300-600 psi); (c) coal residence time, 1 to 4 seconds; (d) complete conversion of coal to syngas with no byproducts; (e) large unit capacities; (f) high thermal efficiencies; and (g) environmentally accepted operation.

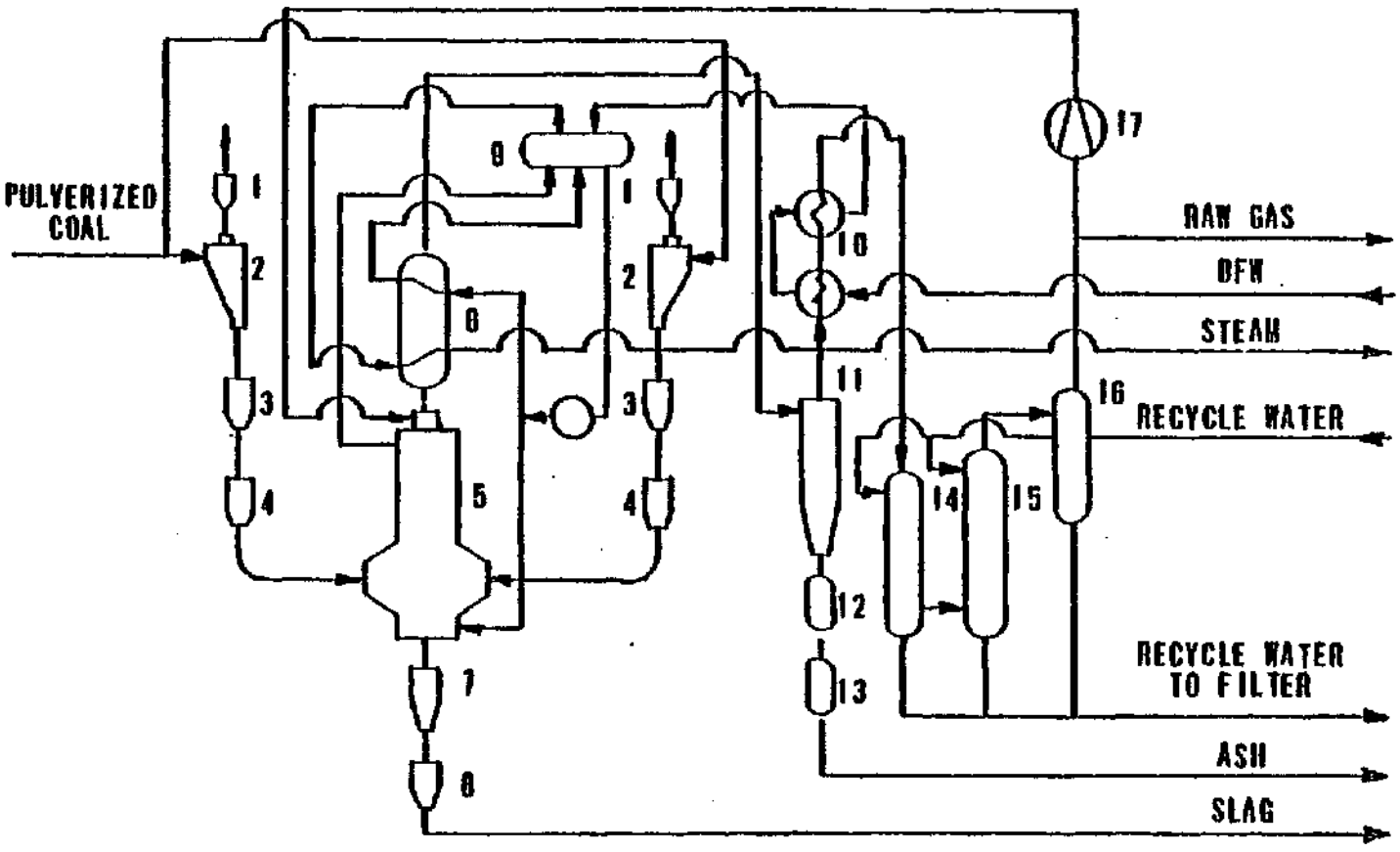

1. COAL FILTER
2. CYCLONE HOPPER
3. LOCK HOPPER
4. FEED HOPPER
5. GASIFIER
6. WASH HEAT BOILER
7. SLAG BREAKER
8. SLAG LOCK HOPPER
9. STEAM DRUM
10. BFW PREHEATER
11. CYCLONE
12. ASH HOPPER
13. ASH LOCK HOPPER
14. VENTURI
15. SCRUBBER
16. H.P. SEPARATOR
17. RECYCLE GAS COMPRESSOR

Figure 2.27
SHELL-KOPPERS COAL GASIFICATION
PROCESS FLOW SCHEME 150 T/D HARBURG PILOT PLANT

Approximately 80 to 85% of the slag formed during gasification drips down the wall and is quenched with water; the remaining 15% is entrained overhead in the outlet gas. The gases leaving the gasification zone of the reactor at about 1500°C (2730°F) and 3.0 MPa (435 psi) are quenched to 800-900°C (1470-1650°F) with solids-free recycled synthesis gas at 100°C (212°F) in order to solidify the entrained slag particles before they enter the waste heat boiler. Several important development objectives remain to be met in this area of the gasification process: (1) It is necessary to quench the gas to $\leq$900°C (1650°F) without causing inadequate carbon burnup or excessive carryover of solids. (2) It is necessary to achieve 85-90% ash removal as slag rather than as fines carryover. (3) It is necessary to achieve about 99% carbon burnup without fines reinjection. (4) It is necessary (for some applications) to reduce fines deposition in the waste heat boiler for sustained operation. These technical objectives appear to be interrelated, and as of June 1980, had not been satisfactorily demonstrated. The gases leave the waste heat boiler at a temperature of 320°C (608°F). In the waste heat boiler superheated steam of 520°C (970°F) and 6 MPa (725 psi) is raised. The waste heat boiler and the reactor tube wall have a common forced circulation system. Some 90% of the solids in the gas are separated in a cyclone. The remaining solids are washed out with water in a series of scrubbers and separators after the gas has been cooled further in two economizers. The gas leaving the scrubbers has a solids content of 1 mg/m^3 (4×10^{-4} $grain/ft^3$) and a temperature of 40°C (104°F).

At present, the solids in the circulating water used in the scrubbers are removed in a filter. In the future they will be concentrated in a slurry which will be reinjected upstream of the cyclone. The water will then evaporate and all solids leaving the waste heat boiler will eventually be separated in the cyclone, thus omitting filtration. This system has already run very successfully in the 6 t/day pilot plant at the Amsterdam Laboratories.[9,30]

2.3.2.5 Feed Requirements

The gasifier is suitable for all types of coal having ash contents up to 40% and sulfur contents up to 8%. The moisture content of coal can vary from 1 to 8%. The coal must be ground to 100 microns in size. The entire output of a mine, including fines, is acceptable as feed. It is claimed that there is practically no limitation on the coal as to ash fusion behavior or caking properties. Solids residue from direct liquefaction processes can also be gasified for hydrogen generation.[9,29,30] The compositions of some of the coals that have been tested in the 6 t/day pilot plant are given in Table 2.20.

Table 2.20 Shell-Koppers coal gasification coal feed analyses[34]

Component wt%	W. German bituminous Low ash	W. German bituminous High ash	Wyodak lignite	Australian brown coal (Yallourn)
Carbon	66.5	51.4	44.6	33.0
Hydrogen	4.3	3.3	3.5	2.3
Oxygen	8.0	6.2	9.9	13.1
Nitrogen	1.0	0.8	0.6	0.3
Sulfur	1.1	0.9	0.4	0.1
Ash	9.1	27.4	6.0	1.2
Moisture	10.0	10.0	35.0	50.0
Heating value LHV, MJ/kg	26.4	20.3	17.2	11.2
(Btu/lb)	(11,374)	(8,746)	(7,410)	(4,825)

2.3.2.6 Reactants

Oxygen = 0.9 - 1.0 kg/kg (0.9 - 1.0 lb/lb) maf for bituminous coals
0.7 kg/kg (0.7 lb/lb) maf for low-rank coals[30]

Steam = Zero for some brown coals
= 0.07 kg/kg (0.07 lb/lb) maf hard coal[9]

2.3.2.7 Gas Composition

For the coals that have been tested, Table 2.21 gives the dry synthesis gas compositions.[34]

2.3.2.8 Efficiency[9,29,32]

Overall thermal efficiency = 94%
(calorific value of gas plus high pressure steam/calorific value of coal feed).

Table 2. 21 Shell-Koppers coal gasification raw gas analyses[34]

Components vol %	W. German bituminous Low ash	W. German bituminous High ash	Wyodak lignite	Australian brown coal (Yallourn)
H_2	31.3	30.2	30.1	28.6
CO	65.6	66.5	66.1	65.8
CO_2	1.5	1.8	2.5	4.7
CH_4	0.4	0.3	0.4	0.1
H_2S	0.4	0.4	0.2	0.1
N_2	0.6	0.6	0.5	0.5
A	0.2	0.2	0.2	0.2

Gasification efficiency (calorific value of gas/calorific value of coal feed) is given as 76% to 81.5% (80% average) to raw synthesis gas with the following claimed losses:

	Percentage heat loss
Waste heat boiler (HP steam)	14
Unconverted carbon	2
Reactor and slag losses	2
Cooler for solids recovery	2
Total	20

The 14% loss in the WHB provides all the steam required for the process including gas treating and the oxygen plant.

Carbon conversions in the Hamburg reactor of >99% are claimed.

2.3.2.9 Environmental Aspects

One of the objectives of development of Shell-Koppers gasifier is environmentally acceptable operation. A mild environmental impact can be expected from the Shell-Koppers process. The requirements for both process and cooling water have been minimized in both the gasification and the solids removal sections.

The gas produced contains no tars, phenols, condensable hydrocarbons or organic sulfur compounds. After acid gas scrubbing, the H_2S in the syngas is about 1 ppm. Sulfur in gas discharged to the atmosphere can be reduced to near zero by 93-95% recovery of sulfur in the Claus unit and a Claus plus tail gas cleanup unit with sulfur removal efficiency of 99%. The only by-products from the process are elemental sulfur and the ash from the coal as non-leachable and inert slag. Depending on the application, the production of waste water is very low to nil.[9,30]

2.3.2.10 Equipment Design of Pilot Plant with Key Problems and Points of Emphasis For Development

Some of the problems that have been experienced so far (several of which have been successfully overcome) in the pilot plant are:[29]

- fouling of waste heat boiler
- tubing corrosion
- refractory corrosion
- lock hopper feed system
- ash leachate
- burner replacement

The waste heat boiler was fouled by non-sticking solids. Thermal shock [usually done by shutting down one burner to reduce temperatures by 50°C (90°F)] has been attempted but has not been too successful. The WHB was designed for cross flow tubes and low velocities; future WHB will use higher velocities and parallel flow tubes.

Chlorides in overhead gases caused corrosion of Incoloy 800 tubing. Testing in Amsterdam showed that Incoloy 850 tubing is satisfactory after 4000 hours of operation.

The gasifier refractory wall is water cooled and pressure is maintained by a low-temperature pressure vessel. Cooling of the refractory produces a slag protective coating which is self healing when flame impingement on the wall occurs. Shell has not found any satisfactory refractory for hot refractory wall operation.

Volatiles from the ash tend to evaporate in the gasifier and condense on the fly ash. These volatiles will leach out upon disposal. Fly ash can be recycled to the gasifier if the recycle is less than 25% of the ash fed. Bleed water from the system must be cleaned to remove ash constituents.

High temperatures in the gasifier require burner replacement every 2000-3000 hours. It is claimed that this could be accomplished under pressure during start-up. As of June 1980 burners had not performed up to expectations. In brief attempts to operate the pilot plant at 30 bars (150 psi) design pressure, the increased coal feed rate to each burner (resulting from increased reaction rate at higher partial pressures of oxygen and steam) resulted in unacceptably short life of the burner heads. Reasons suspected for this are higher velocities, higher temperatures and increased erosion.

High temperatures in the gasifier require burner replacement every 2000 - 3000 hours. It is claimed that this could be accomplished under pressure since the oil start-up burners are currently removed under pressure during start-up.

The operation of the coal transport and flow measuring system, the burners, the reactors and the quench have been very positive. Some of the current process improvements are discussed below:

- Excellent control of the coal feed rates to the burners is claimed but details of the non-impact flow measuring system are confidential. The lock hopper valves have operated well but the larger valves for the 1000 t/day plant may need further development since erosion may be worse. No problems have been encountered with coking or clogging of the burners.

- Very close control of the coal and O_2 feed has enabled Shell to maintain CO_2 in the product gas at 1-2% with two burners and around 6% when one burner is shut off. This ability results in higher carbon conversion efficiency and reduces the acid-gas cleaning requirement.
- The Harburg pilot plant has been operated for a total of 760 hours during 30 experimental runs. The maximum duration run was 240 hours which was terminated by fouling of the WHB as indicated by the high differential pressure. Consideration is being given to redesign of the WHB.
- A pressurized slag grinder is used to reduce slag particle size before letdown. Problems with the slag letdown system have been minimal.