TABLE 17

10,000 BPOD Fischer-Tropsch Synthesis Plant

Manning Table

SUMMARY OF NUMBER OF EMPLOYEES AND PAYROLLS *

BY OCCUPATIONAL CLASSIFICATION

	Executive & Supervisory		Tech.-Prof.-Sales		Clerical-Stenographic		Hourly Rated		Total Employees	Total
General	5	$ 115.5			26	$ 87.5	18	$ 96.0	49	$ 299.0
Sec'y-Treasurer	12	134.0	13	$ 89.0	28	95.5	10	40.0	63	358.5
Ind. Relations	11	103.5	11	83.5	12	40.5	40	216.0	74	443.5
Marketing	4	51.5	6	56.5	13	42.5			23	150.5
Operating - Gen.	3	59.0	5	33.0	9	34.0			17	126.0
" - Eng. Research	6	99.0	21	163.0	7	22.5	6	27.0	40	311.5
" - Power Plant	9	79.5	6	39.0	5	18.5	63	305.8	83	442.8
" - Process Plant	17	157.0	20	142.0	4	13.0	398	1,882.5	439	2,194.5
" - Plant Facilities	21	141.5			5	15.0	110	447.6	136	634.1
" - Maintenance	7	64.5	2	18.0	6	18.0	445	2,828.8	460	2,929.3
	95	$1,005.0	84	$624.0	115	$387.0	1,090	$5,873.7	1,384	$7,889.7

* Salaries and wages in $1,000's per annum

TABLE 18

10,000 BPOD Fischer-Tropsch Synthesis Plant

DETAILED EQUIPMENT LIST--Coal Preparation

Hammer Mill Feed Hopper (4 required, including 1 spare)

Size: 20' x 30' x 10' SS. Ht.
60° sloping bottom
Holdup: 65 tons R/M coal

Crushed Coal Bin (1 required)

Size: 20' x 8' x 40' SS. Ht.
60° sloping bottom
Holdup: 100 tons -3/4" coal

Ball Mill Feed Hopper (6 required)

Size: 2.5' x 15' x 20' SS. Ht.
60° sloping bottom
Holdup: 18 tons -3/4" coal

Cyclone Hopper (6 required)

Size: 4' I.D. x 3' SS. Ht.
60° Cone
Holdup: 1,000 lbs. of 70% through 200 mesh
O. P.: Atmospheric
O. T.: 150° F.

Stockpile Reclaim Hopper (1 required)

Size: 20' x 20' x 15' SS. Ht.
Pyramid Frustum
Holdup: 65 tons -3/4" coal

Hammer Mill (4 required, including 1 spare)

65 T/H R/M coal to 3/4"
H. P.: 50
Drive: Motor

Ball Mill (6 required)

33 T/H -3/4" coal to 70% through 200 mesh
H. P.: 670
Drive: Motor

Hammer Mill Feed Conveyor (4 required, including 1 spare)

19" Belt Rise 50' Horizontal 50'
65 T/H R/M coal
H. P.: 25
Drive: Motor

Product Conveyor (4 required, including 1 spare)

19" Belt Rise 50' Horizontal 50'
65 T/H -3/4" coal
H. P.: 20
Drive: Motor

Ball Mill Conveyor (6 required)

20" Belt Rise 0' Horizontal 25'
33 T/H -3/4" coal
H. P.: 1
Drive: Motor

Feeder to Ball Mill (12 required)

17 T/H -3/4" coal
Table type
H. P.: 2
Drive: Motor

Stockpile Feed Conveyor (1 required)

20" Belt Rise 0' Horizontal 100'
215 T/H -3/4" coal
H. P.: 4
Drive: Motor

Stockpile Reclaim Conveyor (1 required)

17" Belt Rise 50' Horizontal 100'
215 T/H -3/4" coal
H. P.: 76
Drive: Motor

TABLE 18 (continued)

Heating Air Fan (4 required, including 1 spare)

3,200 std.c.f.m. of air
P_1: Atmospheric
P_2: 16" H_2O
T_1: 100°F.
H. P.: 16
Drive: Motor

Air Heater (1 required)

13.2 MM B.t.u./hr. to 570,500 std.c.f.h.
T_1: 60° F.
T_2: 1,200° F.

Cyclone (6 required)

17,000 std.c.f.m. of air
Solid loading - 0.5 lb./cu.ft.
O. P.: 12.7 p.s.i.a.
O. T.: 150° F.

Exhauster (6 required)

17,000 std.c.f.m. of air
P_1: 12.7 p.s.i.a.
P_2: 15.0 p.s.i.a.
T_1: 150° F.
H. P.: 310
Drive: Steam

Bag Filter (6 required)

3,300 std.c.f.m. of air
Size: 12' I.D. x 28' High
O. P.: Atmospheric
O. T.: 150° F.

TABLE 19

10,000 BPOD Fischer-Tropsch Synthesis Plant

DETAILED EQUIPMENT LIST--Gasification

Lock Hopper (4 required, including 1 spare)

Size: 8' I.D. x 17' SS. Ht. x 2.75"
Holdup: 21 tons
O. P.: 525 p.s.i.g.
O. T.: 150° F.

Gasifier (4 required, including 1 spare)

Size: 10' I.D. x 22' x 2.75"
O. P.: 475 p.s.i.g.
O. T.: 2,200° F.
Refractory lining: 9" SiC brick
Insulating brick: 9" B&W K-30
2.5 seconds residence time

Slag Accumulator (4 required, including 1 spare)

Size: 10' I.D. x 14' x 2.75"
O. P.: 475 p.s.i.g.
O. T.: 220° F.
Holdup time: 30 minutes

Settling Tank (1 required)

Size: 150' x 150' x 6.5'
(Concrete)

Slag Quench Water Pump (4 required, including 1 spare)

H. P.: 100
Capacity: 260 g.p.m.
Δ P: 500 p.s.i.g.
Temp.: 120° F.
Drive: Motor

Bailey Feeder (4 required, including 1 spare)

Size: 8.5' I.D. x 35' x 3"
Capacity: 82.7 T/hr.
O. P.: 525 p.s.i.g.
O. T.: 150° F.
H. P.: 30

Feeder Compressor (3 required, including 1 spare)

H. P.: 85
Temp.: 100° F.
Δ P : 110 p.s.i.g.

TABLE 20

10,000 BPOD Fischer-Tropsch Synthesis Plant

DETAILED EQUIPMENT LIST--Purification

Absorber (7 required)

Size: 8' I.D. x 60' Packing x 2-1/4"
Packed Height:
Upper section: 20' of 3/4" Raschig rings
Lower section: 40' of 1-1/2" Raschig rings
O. P.: 415 p.s.i.g.
O. T.: 650° F.

Contact Cooler (1 required)

Size: 3-3/4' I.D. x 11' High x 1-1/8"
Packing: 10' of 1-1/2" Raschig rings
O. P.: 415 p.s.i.g.
O. T.: 200° F.

K. O. Drum (outlet - 6 required)

Size: 3' I.D. x 9' x 7/8"
O. P.: 415 p.s.i.g.
O. T.: 500° F.

Iron Oxide Tower (6 required)

Size: 10' I.D. x 18' SS. Ht.
O. P.: 430 p.s.i.g.
O. T.: 150° F.
1,415 cu.ft. of iron oxide sponge @ 30 lb./cu.ft.

Reactivator (7 required)

Size: 10-1/4' I.D. x 60' Packing x 1/2"
Packed Height:
Upper section: 40' of 1-1/2" Raschig rings
Lower section: 20' of 1" Raschig rings
O. P.: 50 p.s.i.g.
O. T.: 650° F.

Solution Cooler (7 required, including 1 spare)

Type: Shell and tube, floating head with removable tube bundle
O. P.: 100 p.s.i.g.
Approximate surface: 1,740 sq.ft.

Hot Carbonate Pump #1 (7 required)

Type: Multi-stage centrifugal
Capacity: 300 g.p.m.
O. P.: 450 p.s.i.g.
Drive: Motor

Hot Carbonate Pump #2 (7 required)

Type: Multi-stage centrifugal
Capacity: 900 g.p.m.
O. P.: 450 p.s.i.g.
Drive: Motor

Solution Reboiler (7 required)
Located in reactivator

Type: Removable tube bundle
O. P.: 75 p.s.i.g.
Area: 400 sq.ft.

Reflux Accumulator (7 required)

Size: 3' I.D. x 9' x 1/2"
O. P.: 50 p.s.i.g.
O. T.: 650° F.

Reflux Pump (7 required)

Type: Single-stage centrifugal
Capacity: 1 g.p.m. vs. 100 ft.
Drive: Motor
H. P.: 1

Hot Carbonate Mix Tank (1 required)

Size: 6' I.D. x 6' x 3/8"
O. P.: Atmospheric
O. T.: 200° F.

TABLE 20 (continued)

Hot Carbonate Storage Tank (2 required)

Size: 8-1/4' x 25' x 3/8"
O. P.: Atmospheric
O. T.: 100° F.

Solution Centrifuge (1 required for 3 trains)

Type: Bowl
Capacity: 4,000 gal./hr.
Drive: Motor
H. P.: 3
Inlet pressure: 85 p.s.i.g.
Discharge pressure: 15 p.s.i.g.

Acid Gas Cooler (7 required)

Inlet temperature: 212° F.
Outlet temperature: 150° F.
Operating pressure: 75 p.s.i.g.

Contact Cooler Water Pump (2 required)

Type: Multi-stage centrifugal
Capacity: 210 g.p.m.
ΔP: 430 p.s.i.
H. P.: 75

TABLE 21

10,000 BPOD Fischer-Tropsch Synthesis Plant

DETAILED EQUIPMENT LIST--Synthesis Units

Synthesis Reactor (17 required, 12 primary, 3 secondary, 2 spares)

Size: 9' x 30' x 2-1/2"
O. P.: 415 p.s.i.g.
O. T.: 550° F.

Recycle Compressor (14 required, including 2 spares)

Capacity: 1.87×10^6 std.c.f.h.
O. T.: 135° F.
P_1: 385 p.s.i.g.
P_2: 415 p.s.i.g.
H. P.: 172
Drive: Motor

Oil Circulating Pump (17 required, 12 primary, 3 secondary, 2 spares)

Type: Multi-stage centrifugal
O. P.: 430 p.s.i.g.
Capacity: 7,700 g.p.m.
H. P.: 206
Drive: Motor

TABLE 22

10,000 BPOD Fischer-Tropsch Synthesis Plant

DETAILED EQUIPMENT LIST--Catalyst Preparation

Lathes (40 required, including 2 spares)

Capacity: 420 lbs./day
H. P.: 6

Condenser (1 required)

Capacity: 51,200 lbs./hr.
T_1: 500° F.
T_2: 298° F.
Area: 2,850 sq.ft.

Direct Fired Superheater (1 required)

Heat Load: 5.5×10^6 B.t.u./hr.
T_1: 900° F.
T_2: 1,110° F.
Area: 370 sq.ft.

Steam Superheater (1 required)

Capacity: 51,600 lb./hr.
T_1: 298° F.
T_2: 900° F.
Area: 3,000 sq.ft.

Separator Drum (1 required)

Heat Load: 4.7×10^6 B.t.u./hr.
Cooling Surface: 440 sq.ft.

Oxidizing Vessel (1 required)

Size: 11.5' I.D. x 20' x 3/4"
Stainless Steel Clad
O. P.: 50 p.s.i.g.
O. T.: 1,110° F.

Hydrogen Compressor (1 required)

Capacity: 3.82×10^6 std.c.f.h.
O. T.: 100° F.
P_1: 90 p.s.i.g.
P_2: 135 p.s.i.g.
H. P.: 1,660

Dehydrator (1 required)

Size: 8' I.D. x 14' x 11/16"
Adsorbent: 6,100 lb. Silica Gel.

Hydrogen Heat Exchanger (1 required)

Heat Load: 42.3×10^6 B.t.u./hr.
T_1: 100° F.
T_2: 700° F.
Area: 17,000 sq.ft.

Hydrogen Cooler (1 required)

Heat Load: 8.8×10^6 B.t.u./hr.
T_1: 225° F.
T_2: 100° F.
Area: 4,600 sq.ft.

Hydrogen Superheater (1 required)

Heat Duty: 4.7×10^6 B.t.u./hr.
T_1: 700° F.
T_2: 842° F.
Area: 550 sq.ft.

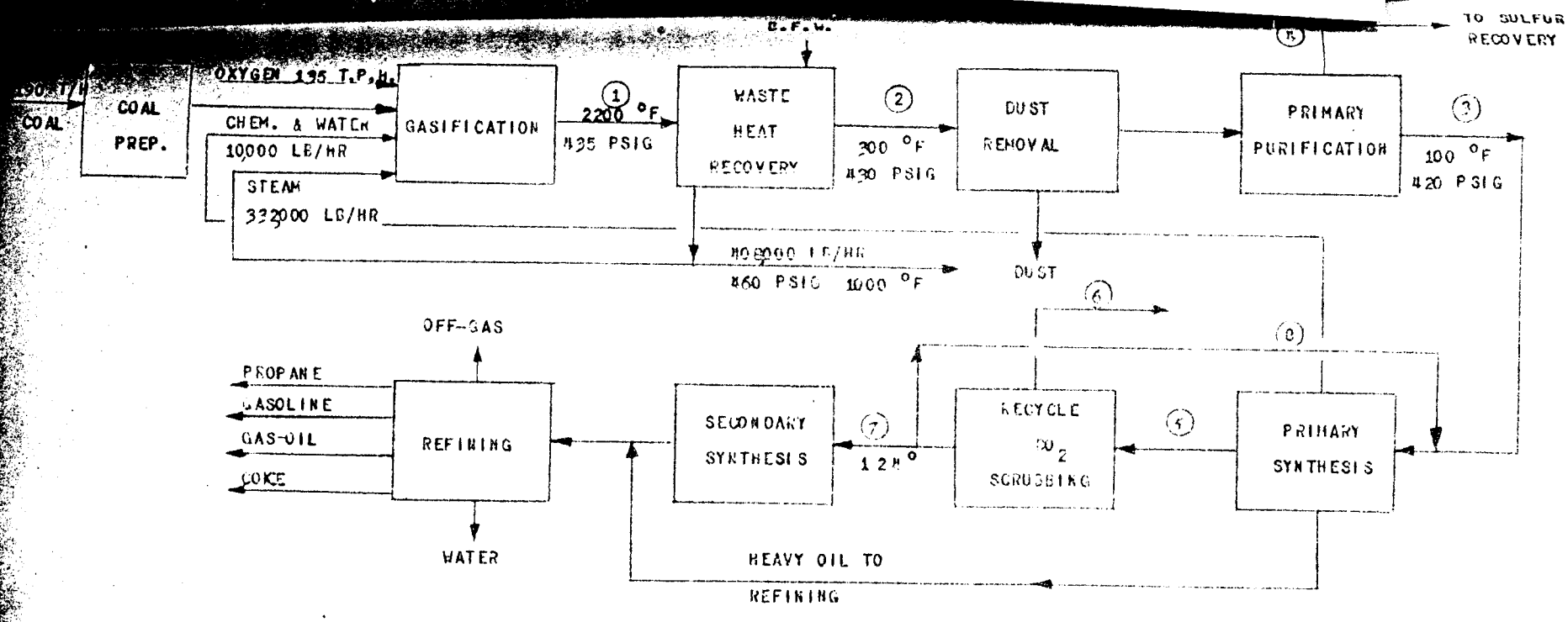

STREAM	1	2	3	4	5	6	7	8
H_2O	29.6%	15.0%	0.2%	0.5%	6.5%	0.3%		2.0%
H_2	29.7%	35.8%	48.8%	0.5%	24.4%	0.3%	22.6%	20.0%
CO	29.7%	35.8%	48.8%	0.5%	24.4%	0.3%	22.9%	28.9%
CO_2	9.4%	11.4%	0.1%	98.1%	10.0%	98.8%	0.5%	0.5%
N_2	1.3%	1.6%	2.1%		8.0%	0.1%	11.0%	9.4%
S	0.3%	0.4%		3.4%				
CH_4					11.1%	0.2%	15.3%	13.1%
C_2					5.5%		7.3%	6.5%
C_3					4.0%			4.7%
C_4					2.8%			3.3%
C_5+					2.4%			2.7%
SCFH	18.4×10^6	15.0×10^6	11.2×10^5	1.0×10^6	1.6×10^6	1.7×10^6	1.6×10^6	11.4×10^6

270 MMSCF CO+H_2/D

FIGURE 1- 10,000 BPOD FISCHER TROPSCH SYNTHESIS PLANT PROCESS FLOWSHEET

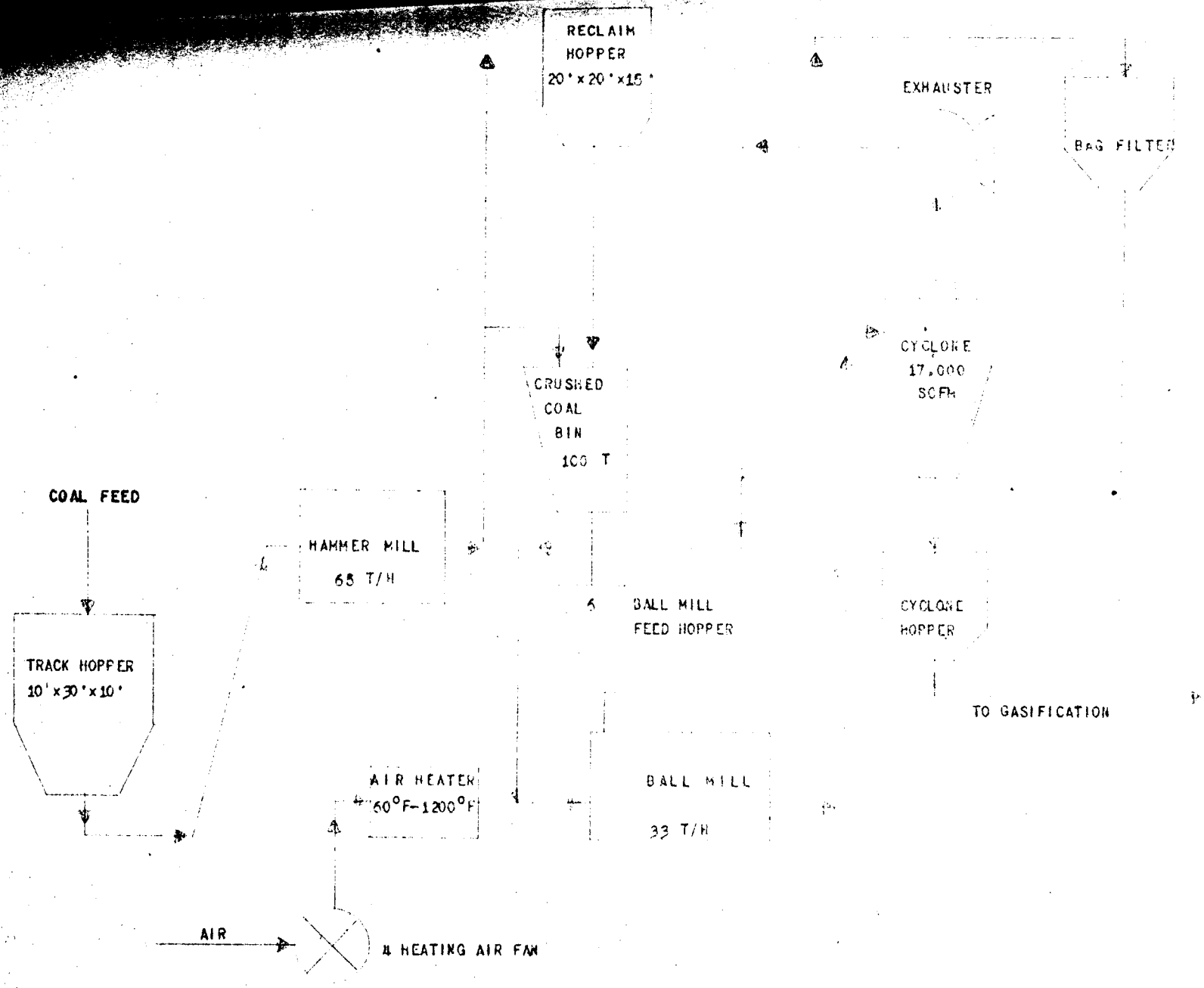

FIGURE 2- COAL PREPARATION UNIT

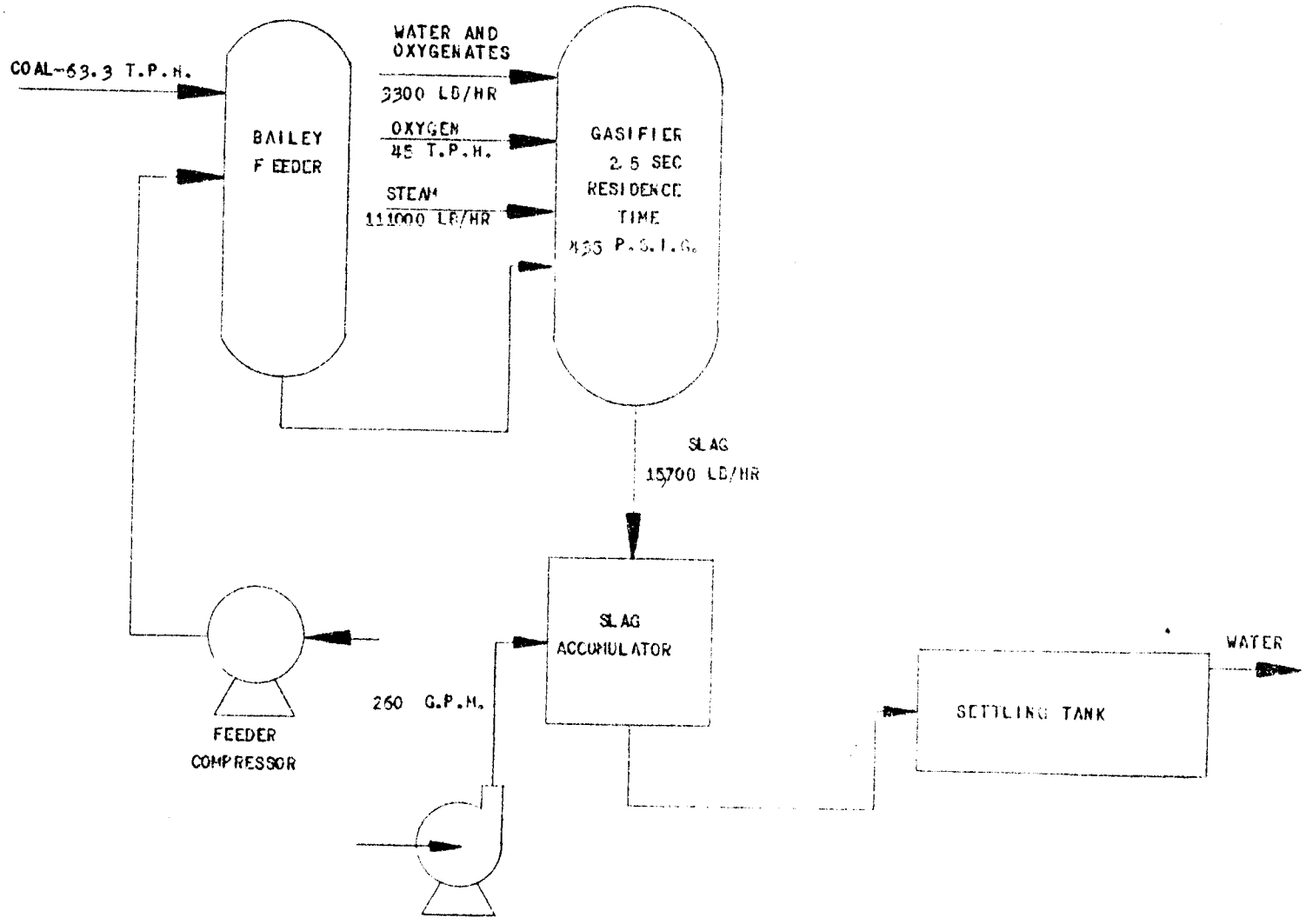

FIGURE 3- 10000 B.P.O.D. FISCHER-TROPSCH SYNTHESIS PLANT
GASIFICATION SECTION

4 PARALLEL TRAINS WILL BE INSTALLED INCLUDING A SPARE

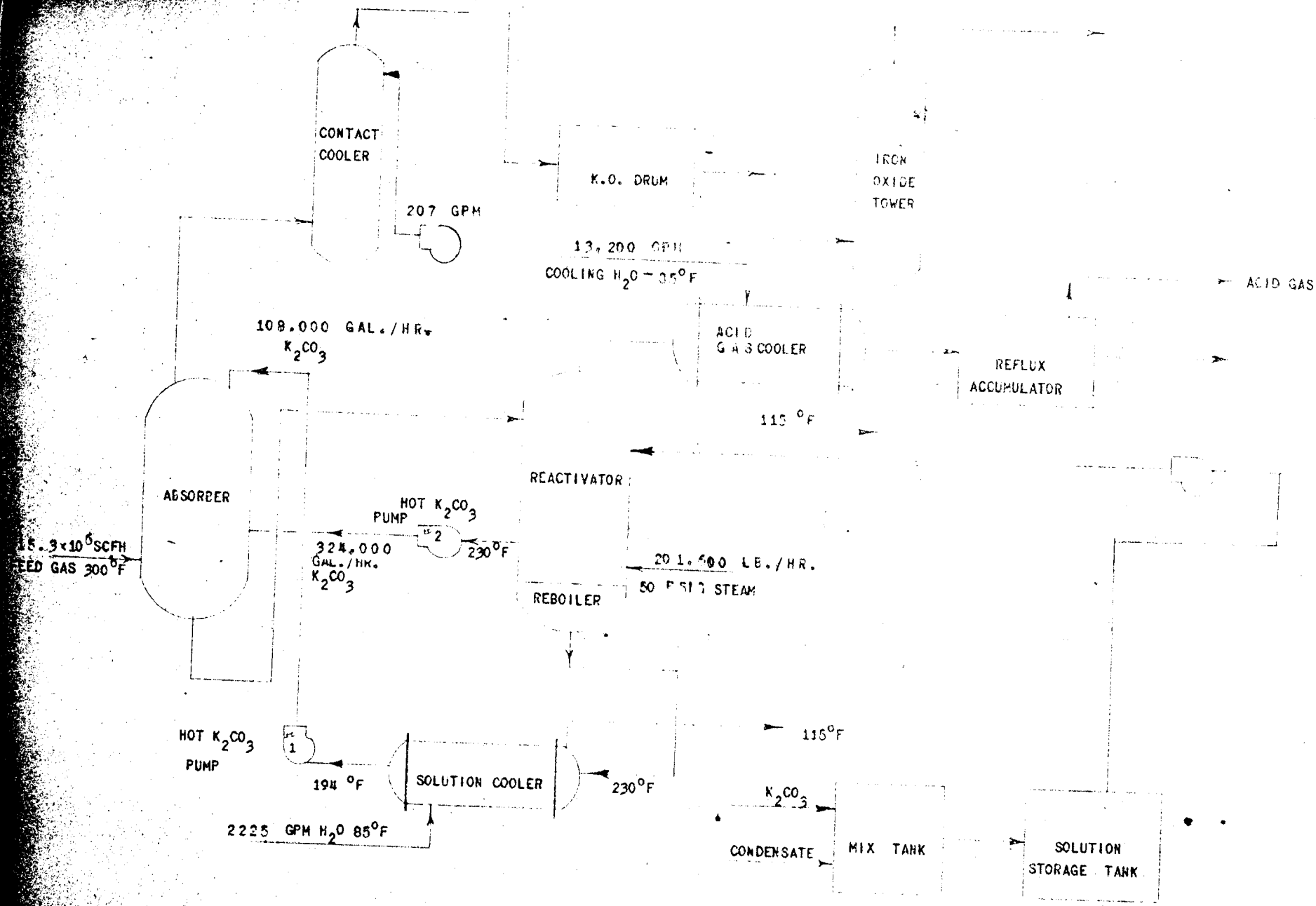

FIGURE 4 – PRIMARY HOT CARBONATE PURIFICATION SYSTEM

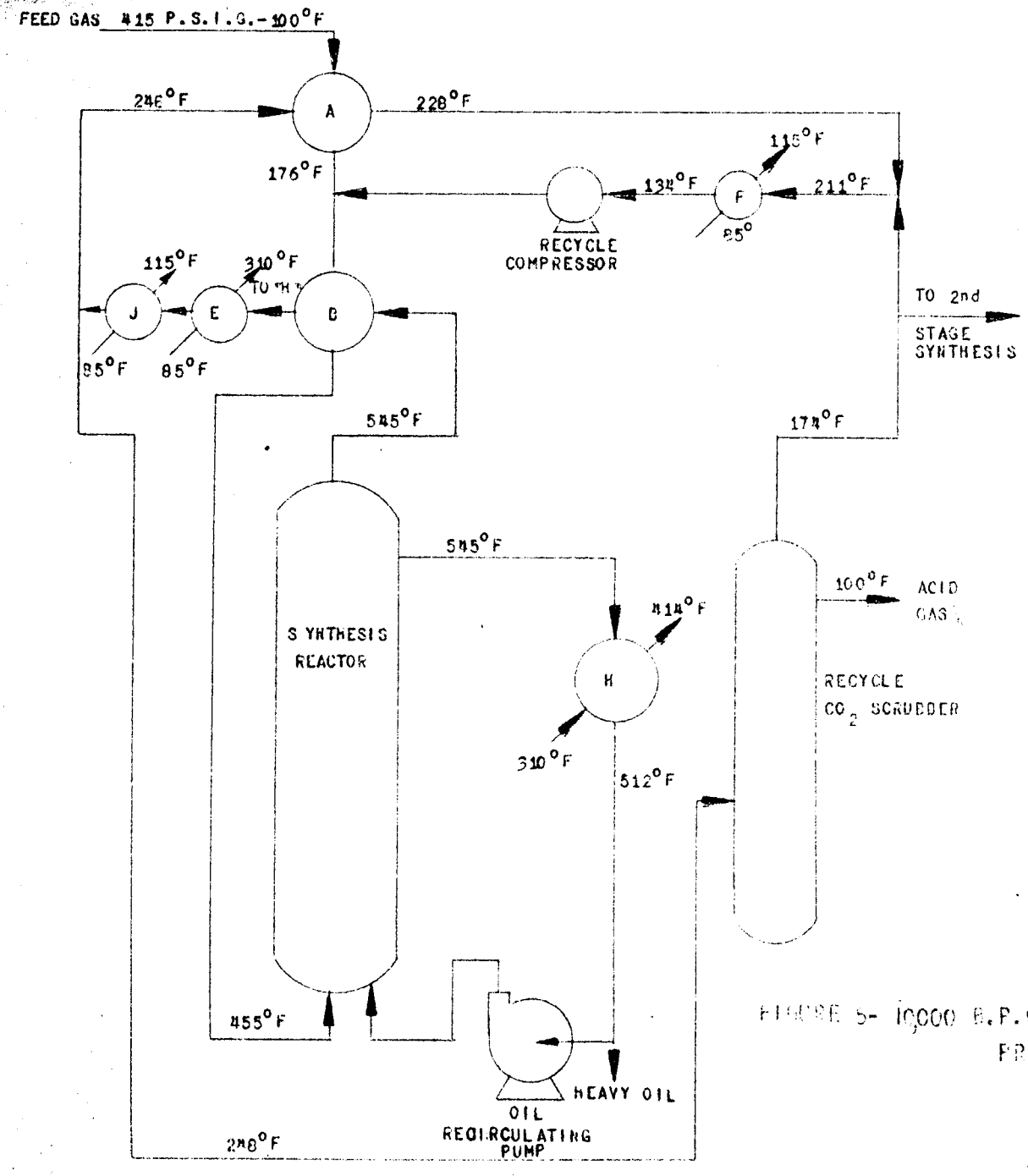

FIGURE 5- 10,000 B.P.C.D. FISCHER-TROPSCH SYNTHESIS PLANT
PRIMARY SYNTHESIS FLOWSHEET

A-6175

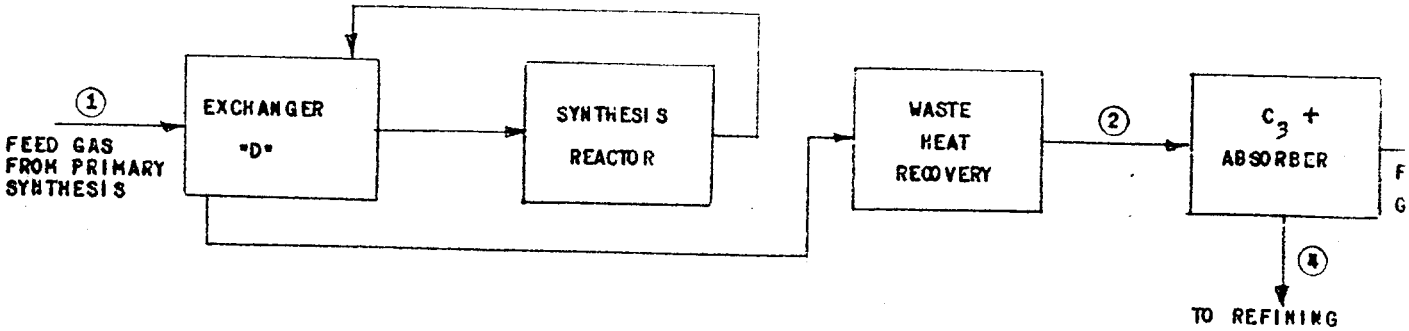

	1		2		3		4	
	MSCFH	VOL. %	MSCFH	VOL. %	MSCFH	VOL. %	MSCFH	VOL. %
H_2	540	33	300	24	300	24.3		
CO	540	33	240	19.2	240	19.5		
CO_2	9.7	0.6	129.3	10.3	129.3	10.5		
N_2	176	10.8	176	14.1	176	14.3		
CH_4	245	15	258	20.6	258	21.0		
$C_2^=$	26	1.6	27.6	2.2	27.6	2.3		
C_2	94.7	5.8	100	8.0	99.2	8.1	0.8	4.2
$C_3^=$	2.7	0.1	5.6	0.4	0.2		5.4	28.3
C_3	1.7	0.1	3.6	0.3	0.2		3.4	17.8
$C_4^=$			2.4	0.2			2.4	12.6
C_4			1.0	0.1			1.0	5.2
$C_5^=$			1.8	0.1			1.8	9.4
C_5			0.3	0.02			0.3	1.6
$C_6^=$			0.6	0.05			0.6	3.1
C_6			0.2	0.02			0.2	1.0
H_2O			3.2	0.26			3.2	16.8
	1635.8		1249.6		1230.5		19.1	

FIGURE 7- 10000 BPOD FISCHER-TROPSCH PLANT
SECONDARY SYNTHESIS

A-6178

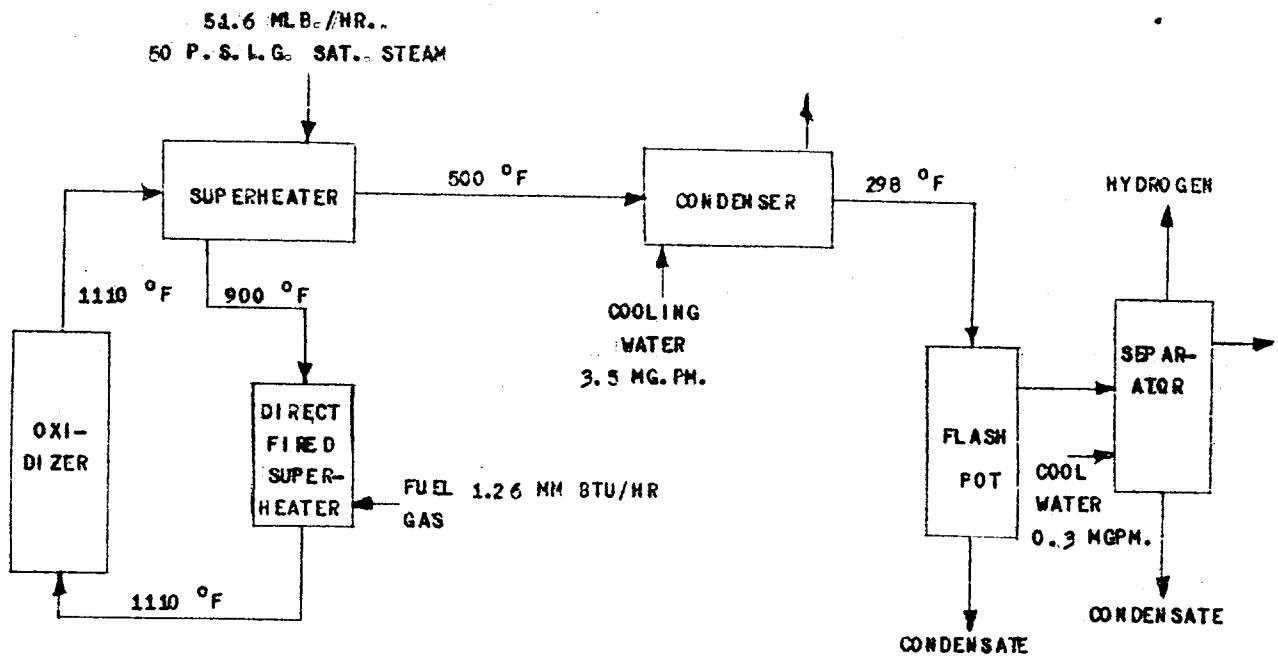

OXIDATION PROCESS

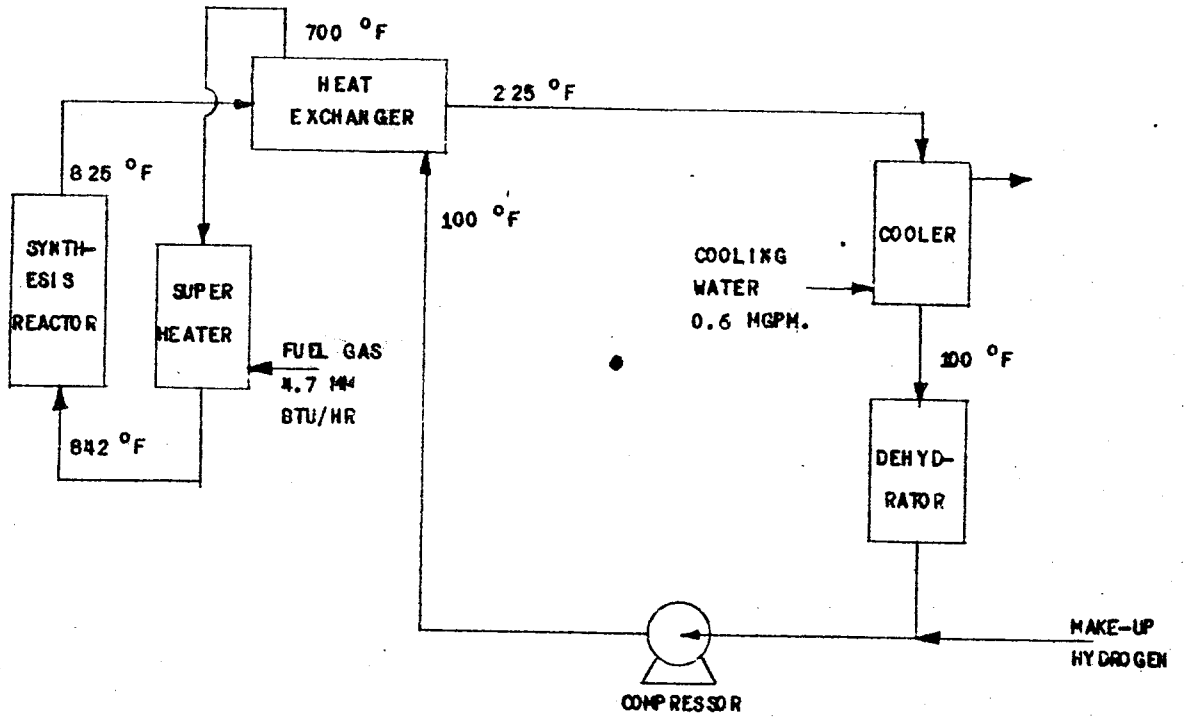

REDUCTION PROCESS

FIGURE 8-1000 BPOD FISCHER-TROPSCH PLANT
CATALYST PREPARATION

A-6358

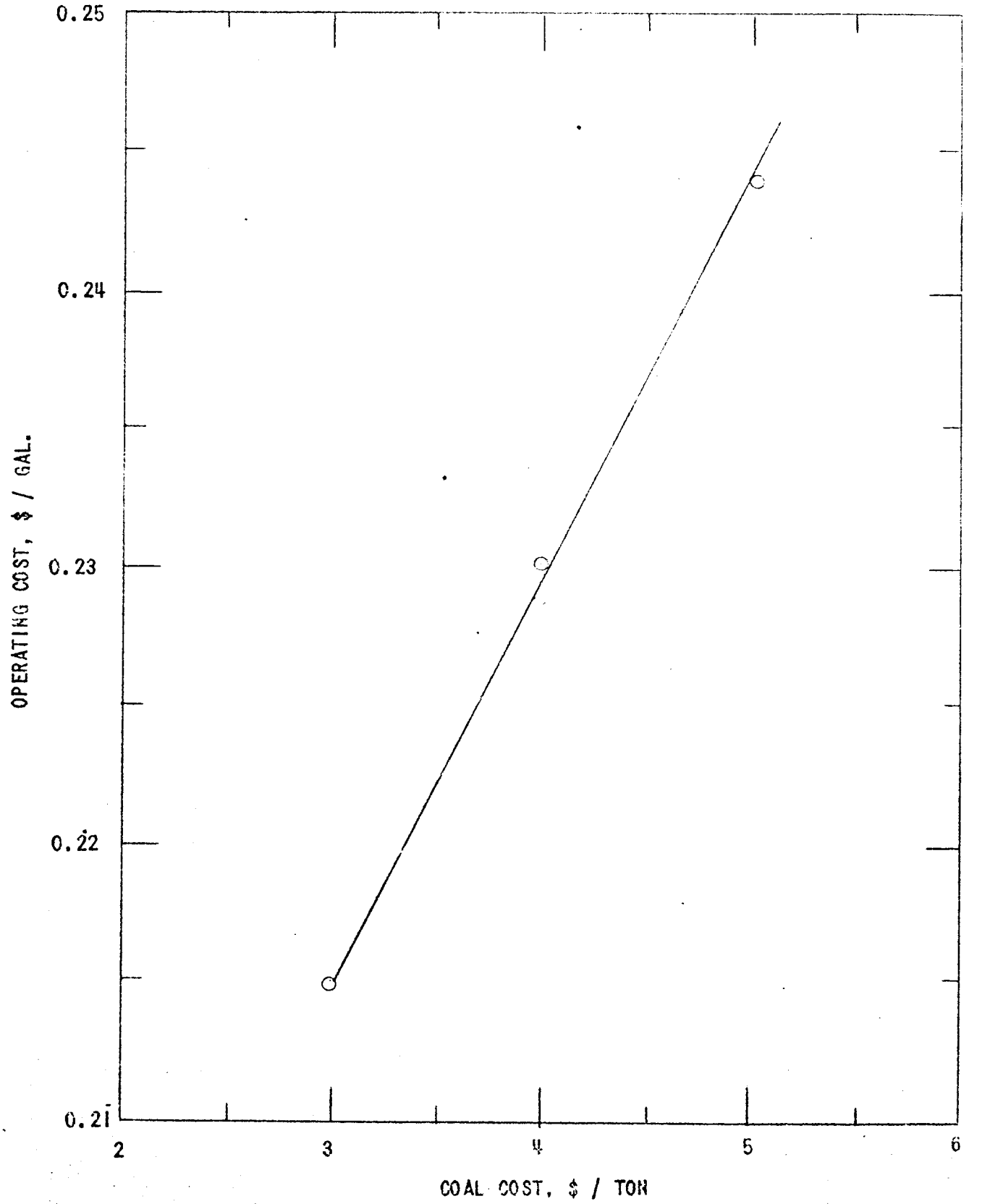

10,000 B.P.O.D. FISCHER-TROPSCH SYNTHESIS PLANT

FIGURE 10 - THE EFFECT OF COAL COST ON OPERATING COST

A-6359

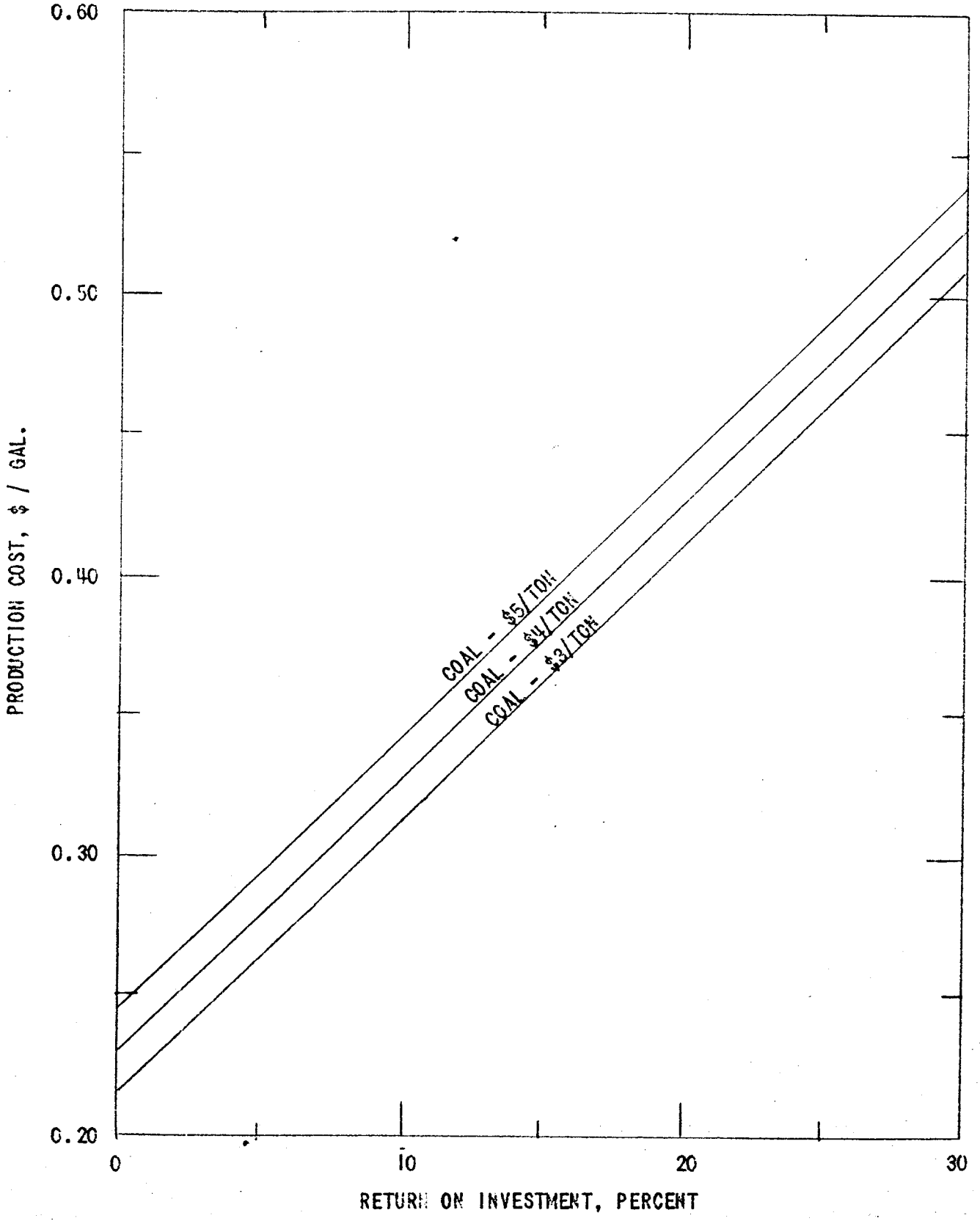

10,000 B.P.C.D. FISCHER-TROPSCH SYNTHESIS PLANT

FIGURE II - THE EFFECT OF RETURN ON INVESTMENT ON GASOLINE COST

BIBLIOGRAPHY

Coal Preparation

1. NATIONAL PETROLEUM COUNCIL, THE. Synthetic Fuels Production Costs. 1953.

2. ZIMMERMAN, O. T., AND LAVINE, IRVIN. Chemical Engineering Costs. Industrial Research Service, Dover, N. H., 1950, p. 173.

Oxygen-Coal Gasification

1. FURNAS, C. C. Rogers' Manual of Industrial Chemistry. D. Von Nostrand Co., Inc., New York, N. Y., 6th ed., vol. 1, 1942, pp. 736-771.

2. GIRDLER COMPANY, THE. Physcial and Thermodynamic Properties of Elements and Compounds. Louisville, Ky., 1954, 38 pp.

3. NATIONAL PETROLEUM COUNCIL, THE. Synthetic Fuels Production Costs. 1953.

Dust Removal

1. PERRY, JOHN H. Chemical Engineers' Handbook. McGraw-Hill Book Co., Inc., New York, N. Y., 3rd ed., 1950, pp. 1013-1050.

Purification

1. BENSON, H. E., FIELD, J. H., AND JIMESON, R. M. CO_2 Absorption Employing Hot Potassium Carbonate Solutions. Chem. Eng. Prog., vol. 50, July 1954, pp. 356-364.

2. COMSTOCK, CHARLES S., AND DODGE, BARNETT F. Rate of Carbon Dioxide Absorption by Carbonate Solutions in a Packed Tower. Ind. Eng. Chem., vol. 29, May 1937, pp. 520-529.

3. COULSON, J. M., AND RICHARDSON, J. F. Chemical Engineering. McGraw-Hill Book Co., Inc., New York, N. Y., vol. 2, 1955, 975 pp.

4. LEVA, MAX. Tower Packings and Packed Tower Design. The U. S. Stoneware Co., Akron, Ohio, 2nd ed., 1953, 214 pp.

5. PERRY, JOHN H. Chemical Engineers' Handbook, McGraw-Hill Book Co., Inc., New York, N. Y., 3rd ed., 1950, pp. 667-711.

6. SHERWOOD, THOMAS K., AND PIGFORD, ROBERT L. Absorption and Extraction. McGraw-Hill Book Co., New York, N. Y., 2nd ed., 1952, 478 pp.

7. WENZELL, L. P., JR., DRESSLER, R. G., AND BATCHELDER, H. R. Plant Purification of Synthesis Gas. Ind. Eng. Chem., vol. 46, May 1954, pp. 858-862.

Waste Heat Recovery

1. GILMOUR, C. H. Short Cut to Heat Exchanger Design--I. Chem. Eng., vol. 59, Oct. 1952, pp. 144-148.

2. _____. Short Cut to Heat Exchanger Design--II. Chem. Eng., vol. 60, March 1953, pp. 226-229.

3. KERN, DONALD Q. Process Heat Transfer. McGraw-Hill Book Co., Inc., New York, N. Y., 1950, 871 pp.

Compression

1. AMERICAN GAS ASSOCIATION. Gas Engineers' Handbook. McGraw-Hill Book Co., Inc., New York, N. Y., 1st ed., 1934, 1017 pp.

2. HOUGEN, O. A., AND WATSON, K. M. Chemical Process Principles. John Wiley & Sons, Inc., New York, N. Y., 1947, 1107 pp.

Synthesis

1. BENSON, H. E. AND OTHERS. Development of the Fischer-Tropsch Oil Recycle Process. Bureau of Mines Bull. 568, 1957, 72 pp.

2. BENSON, H. E., FIELD, J. H., BIENSTOCK, D., AND STORCH, H. H. Oil Circulation Process for Fischer-Tropsch Synthesis. Ind. Eng. Chem., vol. 46, No. 11, Nov. 1954, pp. 2278-2285.

3. CROWELL, J. H., BENSON, H. E., FIELD, J. H., AND STORCH, H. H. Fischer-Tropsch Oil Circulation Process. Ind. Eng. Chem., vol. 42, No. 11, Nov. 1950, pp. 2376-2384.

4. NATIONAL PETROLEUM COUNCIL, THE. Synthetic Liquid Fuels Production Costs. 1953.

Refining

1. NELSON, W. L. Cost-imating. Oil Gas Jour., vol. 55, No. 10, March 11, 1957, p. 193.

2. _____. Cost-imating (Over-all Plant Costs). Oil Gas Jour., vol. 55, No. 13, April 1, 1957, p. 204.

3. _____. Ultraforming. Oil Gas Jour., vol. 55, No. 12, March 25, 1957, p. 137.

4. NATIONAL PETROLEUM COUNCIL, THE. Synthetic Liquid Fuels Production Costs. 1953.

Refining (continued)

5. NIX, H. C. How Humble Runs Catalytic Reformers. Petrol. Refiner, vol. 36, No. 5, May 1957, pp. 189-192.

6. THORNTON, D. P., JR. Cat Poly Unit. Petrol. Proc., vol. 12, No. 7, July 1957, pp. 112-113.

Catalyst Preparation

1. BENSON, H. E., FIELD, J. H., BIENSTOCK, D., AND STORCH, H. H. Oil Circulation Process for Fischer-Tropsch Synthesis. Ind. Eng. Chem., vol. 46, No. 11, Nov. 1954, pp. 2278-2285.

2. COLVIN, F. H., AND STANLEY, F. A. American Machinists' Handbook. McGraw-Hill Book Co., Inc., New York, N. Y., 8th ed., 1945, pp. 327-332.

3. CROWELL, J. H., BENSON, H. E., FIELD, J. H., AND STORCH, H. H. Fischer-Tropsch Oil Circulation Process. Ind. Eng. Chem., vol. 42, No. 11, Nov. 1950, pp. 2376-2384.