DOE/MC/24138 -- 5313
(DE97002061)

RECEIVED
AUG 11 1997
OSTI

Co-Production of Electricity and Alternate Fuels From Coal

Final Report
August 1995

Work Performed Under Contract No.: DE-FG21-87MC24138

For
U.S. Department of Energy
Office of Fossil Energy
Morgantown Energy Technology Center
P.O. Box 880
Morgantown, West Virginia 26507-0880

By
Calderon Energy Company of Bowling Green
P. O. Box 126
Bowling Green, Ohio 43402

MASTER

DISTRIBUTION OF THIS DOCUMENT IS UNLIMITED

THE CALDERON PROCESS FOR

THE CO-PRODUCTION OF ELECTRIC POWER

AND ALTERNATE FUELS

FROM HIGH SULFUR COAL

TABLE OF CONTENTS

		PAGE
0.	SUMMARY	0-1
1.	INTRODUCTION	
1.1	Objective	1-1
1.2	Economic Benefits to Utilities	1-3
1.3	Underlying Technology--Clean Coal Conversion	1-4
1.4	Brief Description of Process	1-4
1.5	Process Demonstration	1-6
2.	PROCESS DEVELOPMENT UNIT, PDU, DESCRIPTION	
2.1	Make-up of PDU	2-1
2.1.1	Coal Feeding and Charging	2-1
2.1.2	Pyrolysis Tube	2-5
2.1.3	Char Guide, Connecting the Pyrolyzer and Gasifier	2-6
2.1.4	Air Blown Char Gasifier	2-7
2.1.5	Gas Clean Up -- Cracking, Desulfurization, Sorbent Regeneration, S Recovery	2-9

NOTE:
Page 2.5 is missing from report

3. PROCESS DEVELOPMENT UNIT, PDU, SHAKE-DOWN

3.1 Problems Encountered and Corrected 3-1

3.2 Comments 3-5

4. PROCESS DEVELOPMENT UNIT, PDU, FORTY EIGHT, 48, HOUR TEST

4.1 Preparation for Test 4-1

4.2 Start of Test 4-7

4.3 Test Proper 4-8

4.4 Regenerator Test 4-21

5. TECHNICAL ANALYSES OF PDU TEST RESULTS: MATERIAL AND ENERGY BALANCES

5.1 Results: Coal Gasification 5-1

5.2 Results: Sorbent Regeneration 5-14

5.3 Conclusions 5-16

5.4 Recommendations for Future PDU Runs 5-18

5.5 References for Section 5 5-20

6. COMMERCIAL PLANT DESIGN BASIS AND DESCRIPTION

6.1 Process Components 6-4

6.2 Process Features 6-4

6.2.1 Positive Displacement Coal Feed 6-5

6.2.2 Horizontal Pyrolysis: Pretreatment of Gasifier Feed 6-5

6.2.3 Air Blown, Moving Bed Char Gasification 6-5

6.2.4 Integrated Hot Gas Cleanup Sulfur Recovery 6-6

6.2.5 Environmental Impacts 6-7

6.2.6 Potential Productivity 6-8

7. COMMERCIAL APPLICATION:
CAPITAL AND OPERATING COST ESTIMATES

7.1 Capital Costs 7-1

7.1.1 Total Plant Investment 7-1

7.1.2 Other Capital Requirements 7-2

7.2 Operating Costs and Revenues 7-2

8. COMMERCIAL APPLICATION: PROCESS ECONOMICS 8-1

8.1 Economic Sensitivities 8-2

THE CALDERON PROCESS

LIST OF EXHIBITS

DRAWINGS		PAGE
2-1	Process Development Unit, PDU - Flow Diagram, Modified Configuration	2-2
2-2	Process Development Unit, PDU - Plant South Elevation	2-3
2-3	Process Development Unit, PDU - Plant East Elevation	2-4
CHARTS		
	29 Pyrolyzer (Total-Best)	4-6
COMPUTER CONTROL, DATA ACQUISITION SYSTEM SCREENS		
0	29 Pyrolyzer -- System Pressure for Gasification Test	4-9
1	Pyrolyzer and H101 Burner	4-11
2	Gasifier & H102	4-12
3	Cyclone	4-14
4	Contactor/Cracker	4-15
5	Pyrolyzer and H101 Burner	4-18
6	29 Pyrolyzer -- System Pressure for Regenerator Test	4-23
7	Contactor/Cracker -- Regenerator	4-25
PRODUCT ANALYSES -- 48 HOUR RUN		
	Gas Analyses (Mixed Gas)	4-17
	Gas Analyses (Lean Gas)	4-19
	Sorbent Analyses (Pre-regeneration)	4-22
	Sorbent Analyses (Regenerated)	4-26

FIGURES

1-1	Calderon Coal Process Plant Conceptual Diagram	1-2
1-2	Calderon Coal Process Pyrolysis, Gasification, Hot Gas Clean Up	1-5
5-1	Temperature - Heat Diagram for the Calderon Pyrolyzer	5-3
5-2	Temperature - Coke Volatiles Dependence	5-4
5-3	Calderon Coal Pyrolyzer Temperatures	5-6
5-4	Calderon Coal Gasifier Temperatures	5-8
5-5	Calderon Coal Gas Clean Up Contactor Temperatures	5-10
5-6	Calderon Regenerator Temperatures	5-15
6-1	Conceptual Design Block Diagram	6-2
6-2	Pyrolysis, Gasification, and Gas Cleanup Block Diagram	6-3
7-1	Distribution of Total Plant Investment	7-3
7-2	Operating Costs	7-4
8-1	Power Cost Sensitivity to Methanol and Coal Price	8-3
8-2	Power Cost Sensitivity to Capacity Factor and Capital Cost	8-4

TABLES

4-1	Sulfur Removal in the Contactor	4-20
5-1	Material and Energy Balance Results	5-12
8-1	Financial Parameters for the Sensitivity Modeling	8-5

Section 0

SUMMARY

The Calderon process and its process development unit, PDU, were originally conceived to produce two useful products from a bituminous coal:

- a desulfurized medium BTU gas containing primarily CO, H_2, CH_4, CO_2, and H_2O; and
- a desulfurized low BTU gas containing these same constituents plus N_2 from the air used to provide heat for the process through the combustion of a portion of the fuel.

The process was viewed as a means for providing both a synthesis gas for liquid fuel production (perhaps CH_3OH, alternatively CH_4 or NH_3) and a pressurized, low BTU fuel gas, for gas turbine based power generation.

The Calderon coal process comprises three principle sections which perform the following functions:

- coal pyrolysis in a continuous, steady flow unit based on coke oven technology:
- air blown, slagging, coke gasification in a moving bed unit based on a blast furnace technology: and
- a novel, lime pebble based, product gas processing in which a variety of functions are accomplished including the cracking of hydrocarbons and the removal of sulfur, H_2S, and of particulates from both the medium and low BTU gases. The product gas processing unit, based on multiple moving beds, has also been conceived to regenerate the lime pebbles and recover sulfur as elemental S.

A variety of applications of the Calderon coal process technology have been considered, including:

- a plant to produce electric power from the pressurized low BTU gas using gas turbine based, combined cycle generation equipment and to synthesize methanol, CH3OH, from the medium BTU gas.
- a new or retrofit power plant which makes use of both high and low BTU gases as fuels for a gas turbine and/or a steam boiler.
- a waste disposal/energy recovery plant for petroleum coke, refinery wastes, and other carbonaceous wastes.
- a clean, coke production plant which produces also a medium BTU gas as a fuel or synthesis gas.

With financial assistance provided by grants from the U. S. Department of Energy and the State of Ohio, Calderon has devoted $17 million and 6 years to the design, construction, and operation of a process development unit, PDU, at Alliance, OH, to obtain information and data for the evaluation and scale up of the Calderon coal process. Process design for this PDU was provided by Bechtel National, Inc.; detailed design, by Stearns Rogers; and construction management and plant operation, by Calderon. After the initial shake down runs in 1990, a number of minor problems were corrected. The PDU was also modified:

- to install a coke breaking device at the exit of the pyrolysis unit;
- to combine the rich and lean fuel gas streams flowing to a single product gas processing unit;
- to provide a air cooled auger as the means for controlling pebble flow and an air line for adjusting temperature in the product gas processing unit;
- to install an auxiliary heater and induction heated slag tap at the gasifier bottom.

The start up procedure for the PDU was also modified to include preheating the gasifier, cyclone, and product gas processing unit to the temperature required to avoid tar condensation and consequent flow stoppages.

A continuous, 48 hour gasification run of the PDU was then accomplished in October 1992; and a run of the lime pebble regeneration unit, in April 1993. The data from these runs have been analyzed: material and energy balances, carried out; chemical equilibria computations, applied; and heat transfer calculations, performed. The data analysis indicates that the instrumentation of the PDU is adequate and a reasonable understanding of the overall Calderon coal process and its performance has been reached. More specific conclusions are:

- the operation of the pyrolyzer in providing coke to the gasifier and a rich gas proved smooth and trouble free.
- a problem occurred with continuous slag removal from the moving bed gasifier.
- the removal of sulfur, as H2S, from the mixed rich-lean product gas stream by fresh lime pebbles in the product gas processing unit was over 90%. (Future runs might well use lower particle flow rates.)
- the cyclone installed to remove particles from the gas leaving the gasifier, entering the product gas processing unit has proved troublesome.
- the flow of pebbles in the regeneration process was smooth and controlled; the process temperature reached in the regenerator, however, was too low to release sulfur from the sorbent. The carbon content of the pebbles was inadequate to raise the temperature to the required value.

Much has been accomplished in the development of the Calderon coal process with the resources provided, but more time and funding for operation of the PDU will be required to explore fully the technology and to provide a comprehensive data base for its commercialization.

It now appears that clean coke production is the most likely near term application of the Calderon coal process. Stringent environmental restrictions on air emissions from coke plants have resulted in a shortage of coke making capacity in the U. S. The Calderon pyrolyzer can readily be adapted to coke production. The gasifier can be replaced by a closed, coke dry quench unit. The product gas processing unit will remove sulfur and particles from the combined rich fuel and quench gases. Heat recovery from these clean gases will provide for higher efficiency and lower operating cost in the production of coke and fuel gas. Also as a immediate application, the Calderon product gas processing unit might well serve as an alternative hot gas clean up system for the integrated gasification, combined cycle, IGCC, plants now being constructed in the Clean Coal program.

The combined production of fuel and synthesis gas still remains a longer term application of the Calderon coal process. Such commercialization is dependent on the installation of coal fired electrical generation capacity and synthetic fuel production capacity. At present, activity in both these areas appears minimal. None the less, the performance of the PDU merits further development of the Calderon coal process for its varied capabilities applied to both the short and the longer needs here in the U. S.

Section 1

INTRODUCTION

The Calderon Process and this report are the result of the continuing effort to develop alternative domestic sources of clean energy from coal. The process is directed primarily toward the use of significant reserves of high sulfur eastern bituminous coals by the industries which are currently using those coals such as electric utilities and the coke producers. Both these industries now face increasingly stringent regulation under the mandates of the Clean Air Act aimed at reducing emissions of SO2, particulates, and unburned hydrocarbons. It is also directed towards all those who seek solutions to the problems of energy transformation, management, and conservation and to leaders in government and industry who determine the direction of U.S. energy objectives and policies.

1.1 Objective

Calderon Energy Company's long term objective is to develop and commercialize a flexible and economic process for producing both electric power and alternate fuels from coal to be employed as illustrated in Figure 1-1. Alternate fuels co-produced with electricity promises a new means for obtaining revenue in addition to electric revenues, through the manufacture and sale of fuel commodities consistent with the public need for domestically produced, environmentally acceptable, non petroleum based transportation and heating fuels. The Calderon coal process -- a proprietary, environmentally acceptable, coal conversion process -- converts inexpensive, high sulfur coal into two product gases: a low cost, desulfurized, low BTU, lean gas with minimal particulates, suitable as a combustion turbine or boiler fuel; and a high hydrogen content,. rich gas suitable for the synthesis of methanol, reduction of iron, heating or transportation fuel

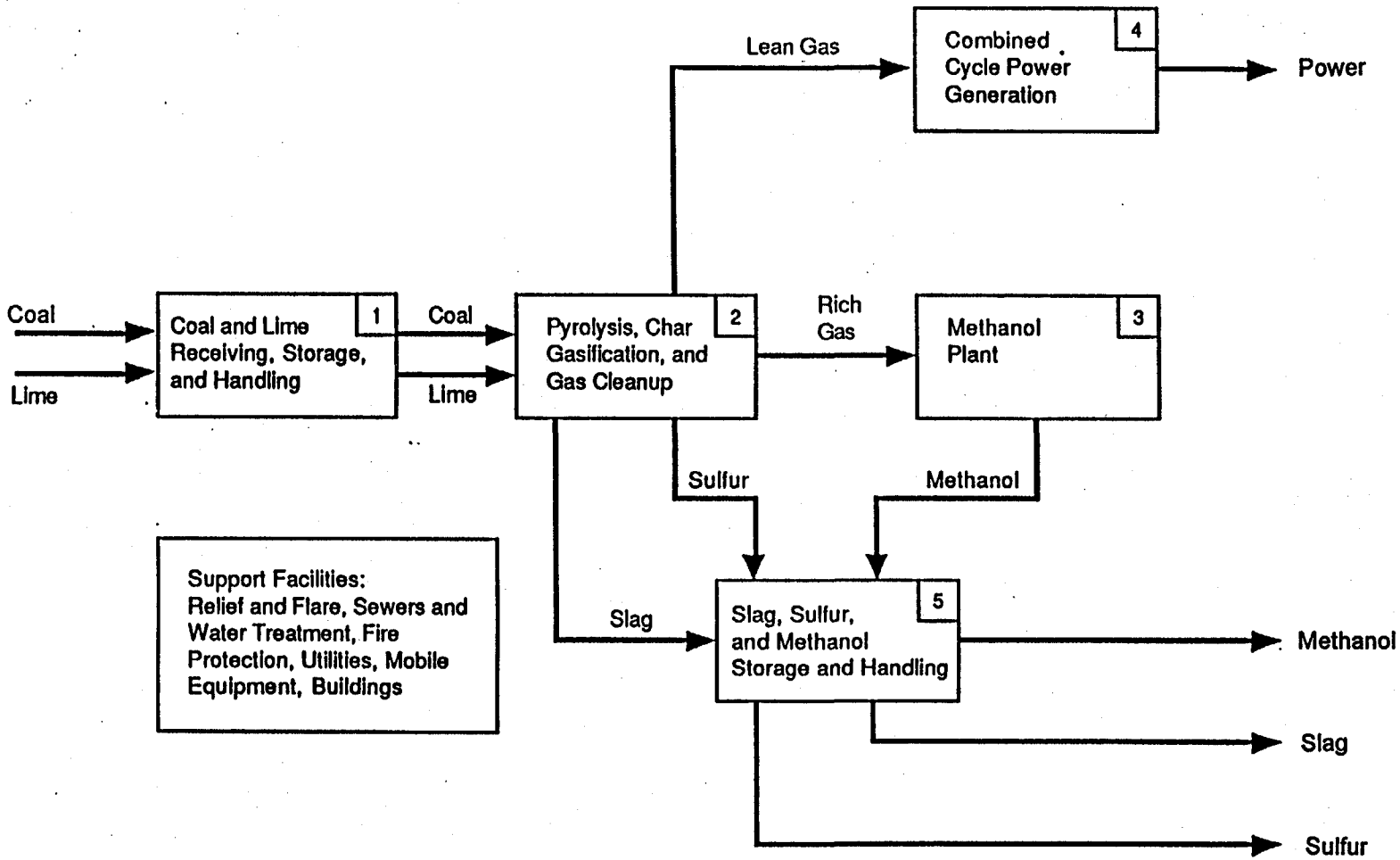

Figure 1-1 **Calderon Coal Process Plant Conceptual Diagram**

production. Both gases can be produced at an elevated pressure suited to their use in power generation or liquid fuel synthesis.

The ash of the coal is fused as a slag in the process and removed as an inert, glassy product. Limestone pebbles are used in gas cleanup system to remove sulfur, H2S, and particulates from both the lean, fuel gas and the rich, synthesis gas. The calcined, spent lime pebbles are regenerated in the cleanup system by a process which produces elemental sulfur and fused ash (slag) for sale.

Calderon Energy plans to construct and operate modular facilities at or near utilities, to provide existing or new capacity with clean, manufactured fuel gas for power production and to provide the additional revenue generation option represented by alternate fuel co production. Facilities may be owned in whole or in part by Calderon Energy Company, by the utility, or jointly by Calderon Energy and the utility and/or other project investors, as the business interests of the utility may indicate.

1.2 Economic Benefits to Utilities

In addition to offering economic benefits from alternate fuel co-production, the Calderon Process offers cost savings to utilities through its manufactured fuel gas. The Calderon Process effectively avoids post-combustion pollution controls for SO2, and particulate matter associated with the use of traditional fossil fuels, by providing to utilities a clean manufactured fuel gas which does not require post combustion pollution controls. Capital and operating costs associated with scrubbers, precipitators, and selective catalytic reduction for NOx control are avoided, as are waste disposal costs associated with scrubbers and coal ash disposal. As the Calderon Process utilizes crushed run of mine coal and does not require coal pulverization, capital and operating costs related to coal pulverization mills are also avoided. The Calderon Process may

be viewed as a method of life extension for existing coal-fired power plants, since its manufactured fuel gas avoids ash caused degradation to boilers and resulting maintenance or replacement costs. These avoided operating and capital costs qualify as economic benefits additional to the manufactured fuel supply option's lowered fuel supply costs when coupled to combined cycle power generation. Finally, the manufactured gas facility's low fuel supply costs offer positives relevant to utility economic dispatch, least cost resource, and environmental compliance planning.

1.3 Underlying Technology -- Clean Coal Conversion

The Calderon Process is environmentally benign and does not result in air emissions, water discharges, or potentially hazardous solid wastes. All parts of the coal -- its volatile matter, carbon, ash, and sulfur content -- are turned to usable products. This "whole resource" approach to coal use avoids the creation of wastes and results in the production of a clean manufactured gas and electric power (the process' two major products) and two salable by products, elemental sulfur and an inert, non leaching slag. The process does not use water based gas scrubbing and requires no water discharge treatment plant.

1.4 Brief Description of Process

The Calderon coal process, illustrated schematically in Figure 1-2 involves three basic steps

- pyrolysis, in which crushed run-of-mine coal is introduced continuously to a pyrolysis tube and heated at pressure to high temperature, driving out the coal's volatile matter in the form of a high hydrogen rich gas.

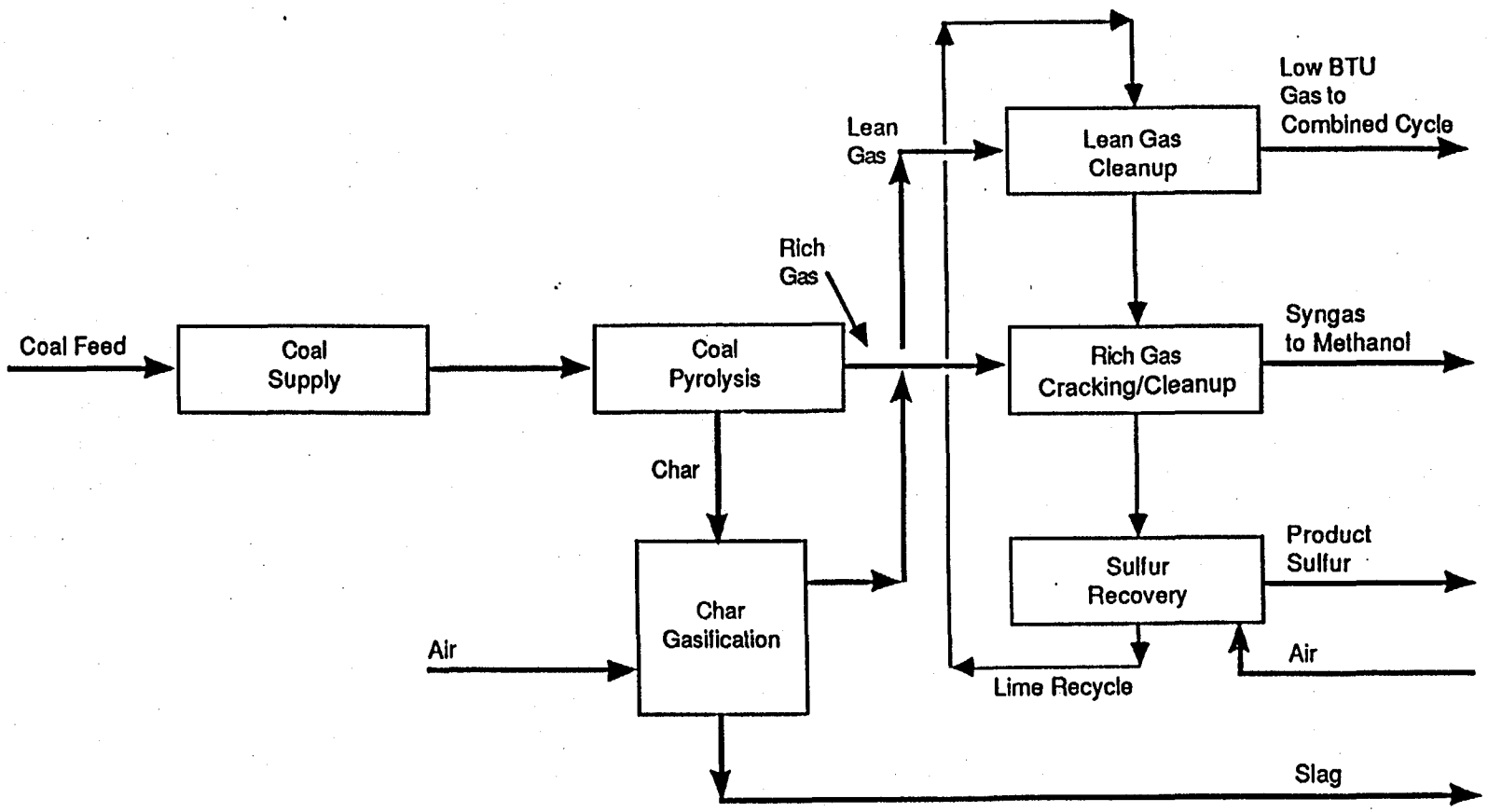

Figure 1-2 **Calderon Coal Process Pyrolysis, Gasification, and Gas Cleanup**

- gasification, in which the remaining porous char/coke product from pyrolysis is reacted in a moving bed with heated air at high temperature, to convert the char's remaining fuel content to a low Btu gas and its ash content to an inert slag.

- hot gas cleaning, in which sulfur -- in the form of H2S -- and particulates are removed from each of the two product gases in separate, high temperature, moving, lime sorbent pebble beds. Higher hydrocarbons in the rich gas are also cracked in the sorbent bed resulting in finished synthesis gas for alternate fuel production. The gas cleaning system includes regeneration of the spent lime pebble sorbent in a third moving bed with air at high temperature, producing reusable sorbent pebbles and elemental sulfur as a salable product.

The Calderon Process is continuous, to ensure an uninterrupted, dependable supply of hot fuel gas to the utility without boiler de-rating. It is air blown rather than oxygen blown, avoiding a capital intensive oxygen plant and associated cold gas cleaning -- process features of other coal gasification reliant technologies which have associated substantial economic and energy penalties.

1.5 Process Demonstration

The Process has been demonstrated at a $17 million process development unit, PDU, constructed and operated by Calderon Energy in Alliance, OH, funded by U.S. Department of Energy, Calderon, and the State of Ohio.

Section 2

PROCESS DEVELOPMENT UNIT, PDU, DESCRIPTION

The Calderon coal process PDU, which is located in Alliance, OH, is shown in the photograph on the front cover of this report. This PDU was designed to process 24 tons of coal per day at a maximum pressure of 330 psig. Its configuration for the 48 hour continuous run is shown in the flow diagram, Figure 2-1; the equipment items and their arrangement in the support structure are illustrated in Figures 2-2 and 2-3. All the various items of process equipment -- Pyrolyzer, Gasifier, and Clean Up vessels -- are identified in the figures and their scale is indicated by the dimension at the base of the drawings. The equipment is contained within a structure rising some 190 feet in the air and equipped with 10 floors. The structure also houses the coal and limestone sorbent pebble feeding equipment. An elevator for personnel and equipment services the 10 floors of the structure. Other facilities at ground level include a compressor building, an electrical control center, an operator station and laboratory, a boiler room, employees' trailer, maintenance shop, office trailer and miscellaneous storage.

2.1 Make-up of PDU

The PDU is made up of the following components:

2.1.1. Coal Feeding and Charging - The coal is lifted from ground level to the coal lockhopper by means of a skip hoist. Coal feed is charged into the pressurized equipment of the PDU through a lockhopper equipped with ball valves at the top and bottom. The lockhopper is a pressure coded vessel. Both the ball valves are commercially available pieces of equipment; the ball and seat assembly are 410 SS with a boron carbide coating for improved solids abrasion and sulfur corrosion

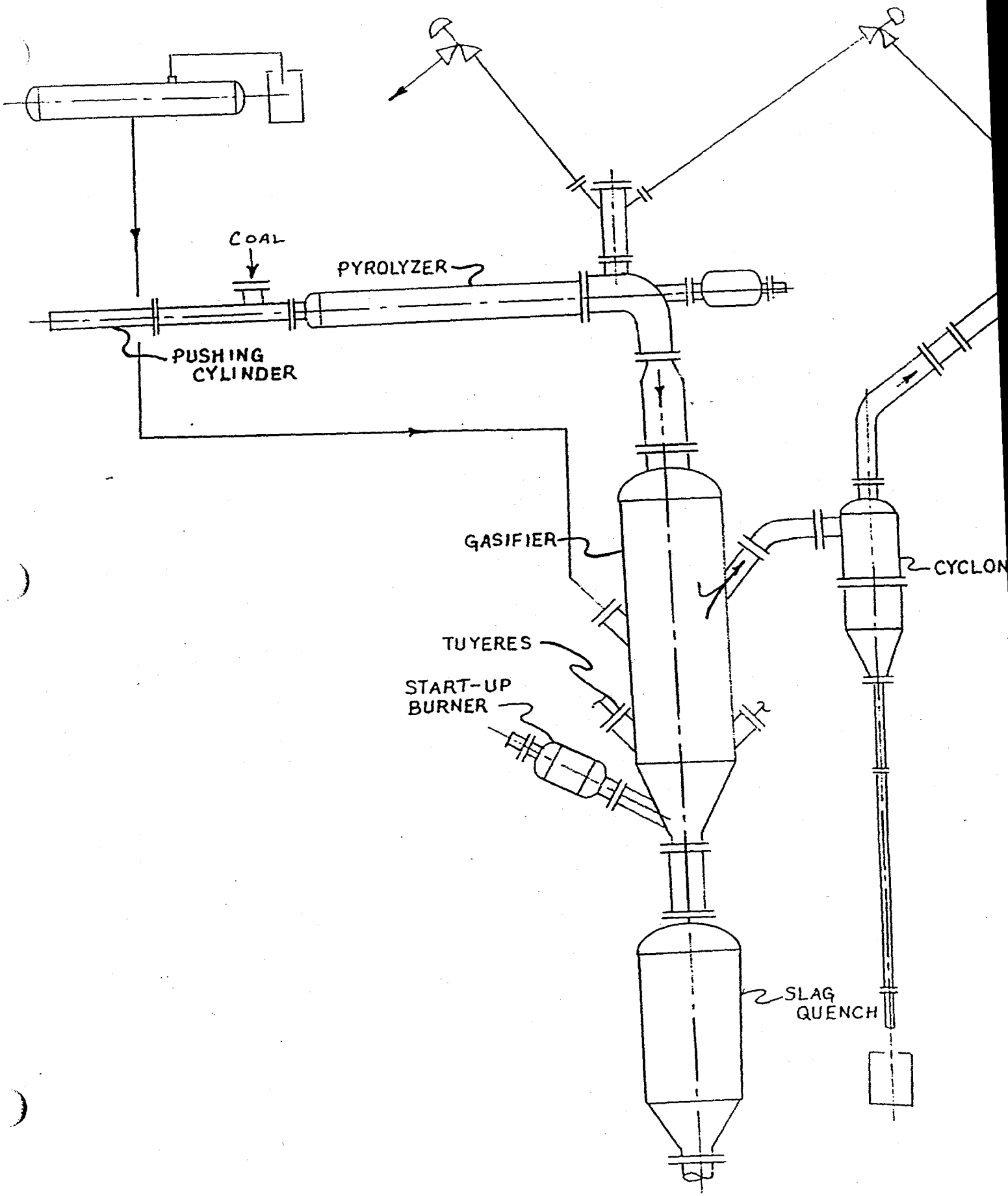
COAL
PYROLYZER
PUSHING CYLINDER
GASIFIER
CYCLON
TUYERES
START-UP BURNER
SLAG QUENCH

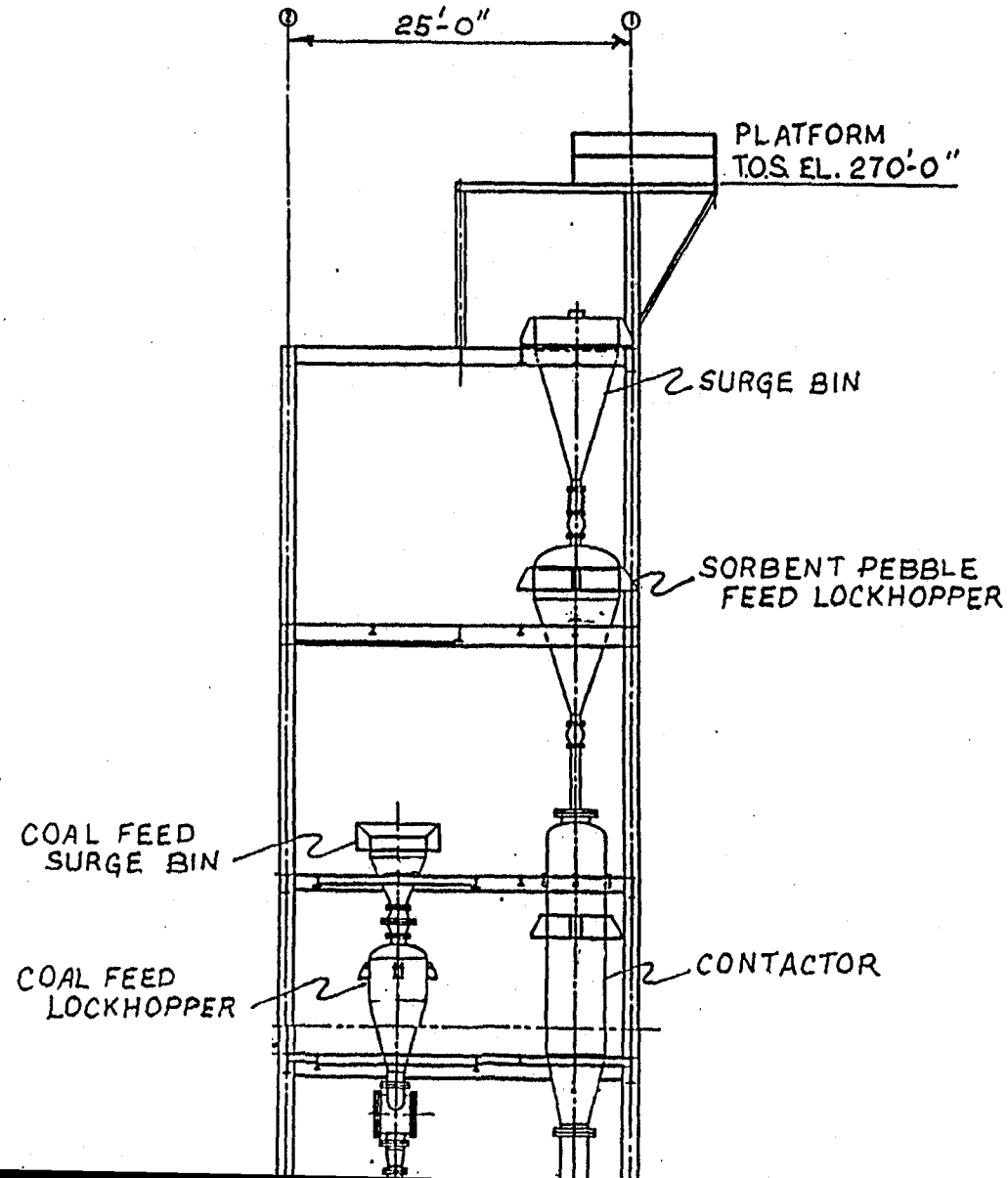
25'-0"
PLATFORM
T.O.S. EL. 270'-0"
SURGE BIN
SORBENT PEBBLE
FEED LOCKHOPPER
COAL FEED
SURGE BIN
COAL FEED
LOCKHOPPER
CONTACTOR

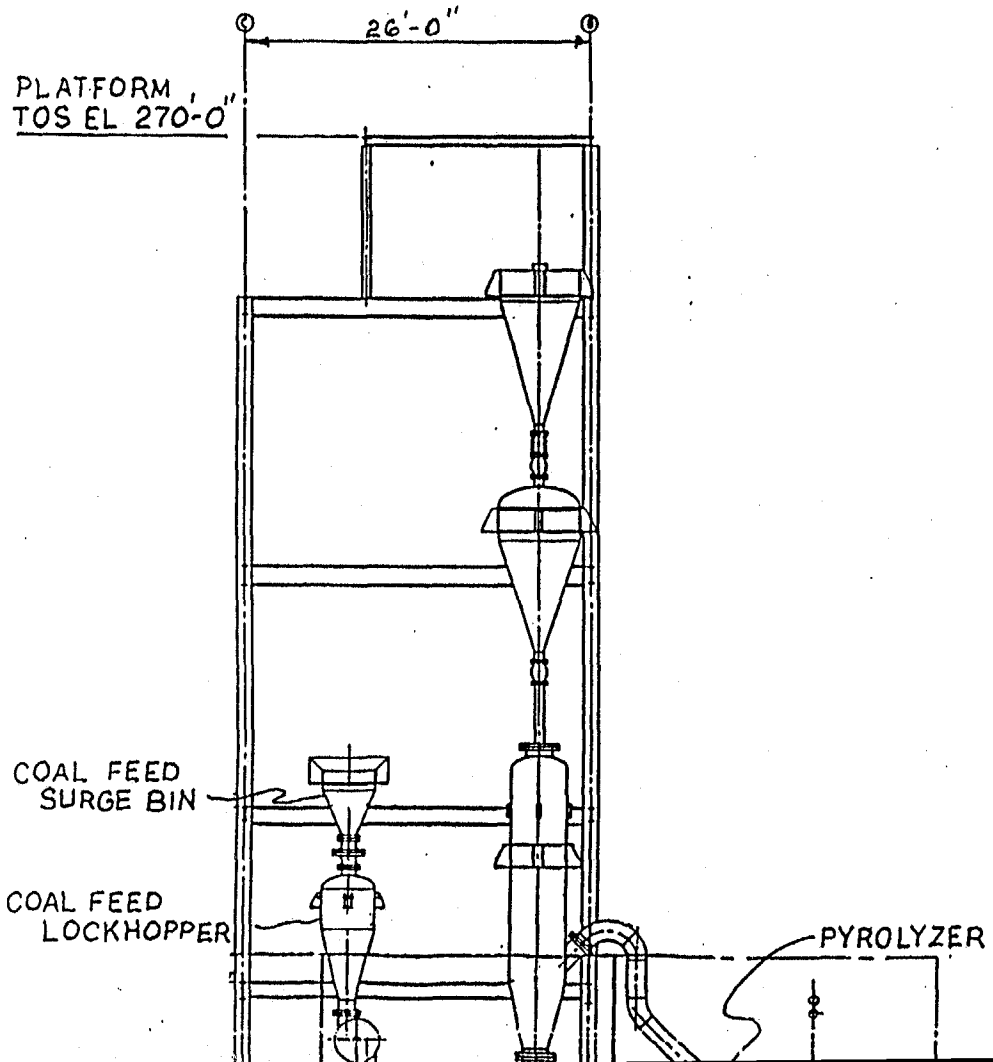
26'-0"
PLATFORM
TOS EL 270'-0"
COAL FEED
SURGE BIN
COAL FEED
LOCKHOPPER
PYROLYZER

resistance. The lockhoppers are sized to handle 3-1/2 x 0 inch crushed, run-of-mine coal without limitations on the fines content. Such lockhoppers are in common commercial use. Level controls are installed on the lockhopper to detect when additional coal feed is required. A rotary feeder located above the bottom valve controls the flow from the lockhopper into a charging tube. This arrangement avoids closing the ball valve on solids and thus extends the life of the valve.

A vertical nozzle receives coal from the feeder and delivers its to a horizontal charging cylinder. One end of this charging cylinder is occupied by a pushing piston; and the other end is connected to the pyrolysis tube, described in detail below. The pushing piston is supported on a sliding nylon bushing with double cast-iron scraper rings protecting the nylon bushing. It is a hydraulically operated ram, capable of developing one million pounds of force, which moves the coal through the charging cylinder into and through the pyrolysis tube.

2.1.2 Pyrolysis Tube - The pyrolysis tube, or Pyrolyzer, is a Calderon proprietary device in which the coal feed is heated at pressure to drive off its volatile content and thus to produce a char or coke. The tube is inclined slightly to permit the tars to drain away from the charging cylinder. The Pyrolyzer is an insulated, double wall heat exchanger enclosed by an outer pressure boundary. Hot gases from a pressurized burner heat the coal within the Pyrolyzer. The burner, capable of using either lean or natural gas, is located at the end of the Pyrolyzer opposite the charging cylinder. The flow of the hot combustion product gases is counter current to the direction of the coal flow.

The tube grows in length as it reaches pyrolysis temperature. The Pyrolyzer was completely assembled in the fabricator's shop and truck delivered to the site as an assembly. It was hoisted in a single lift, and positioned between the coal pushing cylinder and the guide which directs the char product of the Pyrolyzer into the Gasifier. The Pyrolyzer, essentially a carbonizer, destroys the caking properties of coal and produces a reactive char, suitable for gasification.

The inner tube wall of the Pyrolysis is exposed to coal volatiles, rich gas, on its inner surface in contact with the coal, and to hot combustion product gases on its outside surface. The operating temperature varies from approximately 1400°F at the char discharge end to approximately 700° F at the coal charging end. The outer tube wall or jacket of the Pyrolyzer is exposed on its inside surface to combustion product gases from the burning of a fuel gas.

The feeding and charging equipment of the Pyrolyzer, are mounted together on a slide, so that by disconnecting them from its cold end they can readily be moved away for inspection and maintenance.

2.1.3 Char Guide, Connecting the Pyrolyzer and Gasifier - The char guide is located at the end of the Pyrolyzer opposite the coal charging cylinder. It is a refractory lined coded vessel, in the form of an elbow, with a nozzle at the top as an outlet for the coal volatiles, the rich gas. A coke breaker is mounted at the end of the Pyrolyzer within the Char Guide to avoid obstruction of char flow by oversize char boulders. This Char Guide elbow thus smoothly delivers the hot char chunks from the horizontal Pyrolyzer into the vertical Gasifier.

2.1.4 Air Blown Char Gasifier - The Calderon proprietary air blown, slagging char Gasifier is a refractory lined, vertical pressure vessel equipped at the bottom with:

- tuyeres for blowing air,
- a burner for preheating both the Gasifier and down stream gas cleaning equipment, and
- an induction heated nozzle for molten ash, slag removal.

The Gasifier is similar in basic design to a small blast furnace. It is made in such a way as to be transportable by either truck or rail.

The bottom of the char Gasifier, however, is configured differently from a blast furnace. The conventional blast furnace has a flat hearth for the accumulation of iron; notches or "tap-holes" are installed at the side of the hearth for intermittent tapping. But the Calderon Gasifier has a conical bottom with an induction heated cylinder its apex equipped to provide for continuous drainage of molten slag from the Gasifier.

Preheated air (300-900°F) is introduced around the periphery of the bottom cone through four tuyeres. The oxygen of the air reacts with the char to form combustion products and slag.

$$O2 + C \rightarrow CO2$$

The maximum temperature at the base of the Gasifier is about 2800°F, the same as the bottom of a conventional blast furnace. At this temperature, the coal ash becomes molten and takes the form of an inert slag. In higher regions of the Gasifier the combustion products, CO2, flowing from the bottom gasify the char, C, producing the lean fuel gas containing CO and nitrogen, N2, from the air.

$$CO2 + C \rightarrow 2CO$$

No steam is used in the operation of this air blown slagging Gasifier. The use of air, rather than pure oxygen, makes the use of steam for temperature moderation unnecessary. This feature makes the Gasifier more effective -- easier to construct and simpler to operate.

A burner, located above the induction heated slag tap cylinder at the base of the Gasifier, assists in heating the Gasifier and the downstream Gas Clean Up equipment at start-up. It is also useful in maintaining molten slag flow in the base of the Gasifier to the tap.

A water filled quench hopper located below the slag tap of the Gasifier solidifies the molten slag, cools it, and delivers it to the slag lockhopper.

The operating conditions of the Gasifier require a refractory lining resistant to molten slag, to char flow, and to reducing gases over a wide range of temperature. The lining which proved effective in PDU operation was prepared as follows.

- Stainless steel clips were welded on the inside of the pressure shell.
- A coating good for 800°F was sprayed on the inside of the shell to prevent corrosion from moisture.
- Ceramic anchors were uniformly spaced for support and Kast-o-lite 30, insulation good for 3000°F made by A. P. Green, was gunned to 3" in thickness.
- A refractory also made by A. P. Green, C-9, good for 3400°F, was cast in place.

In the 48 hour run of the PDU the rich gas from the Pyrolyzer was directed to the Gasifier along with the char; the rich gas take off from the Char Guide was

purposely blocked. Rich and lean gas were mixed at the top of the Gasifier and flowed together into the Gas Clean Up equipment. This arrangement reduced the cost of plant modifications proved necessary in preliminary runs, and it simplified plant operation. It also is the mode of operation if a single fuel gas were required from the Calderon coal process.

2.1.5 Gas Clean Up -- Cracking, Desulfurization, Sorbent Regeneration, S Recovery - The Hot Gas Clean Up system is comprised of the following main equipment items

- the Contactor to clean the lean gas, remove H2S and particulates; it calcines the fresh limestone sorbent pebbles

$$CaCO3 \rightarrow CaO + CO2$$

  and reacts the resulting lime pebbles with H2S.

$$CaO + H2S \rightarrow CaS + H2O$$

- the Cracker to clean the rich gas; crack hydrocarbons to carbon, C, and H2, and remove H2S and particulates by means of the lime pebbles.
- the Regenerator to regenerate the sulfur sorbent from the Contactor and Cracker, converting CaS to CaO and elemental sulfur, S, by the overall reaction

$$2CaS + O2 \rightarrow 2CaO + 2S$$

- the Condenser to cool the gases leaving the Regenerator and condense the sulfur, S, and recover it from the gases.
- the Lime Lift to recycle the lime, CaO, sorbent pebbles after regeneration along with fresh limestone, CaCO3, pebbles to make up for losses.

The above equipment and the manner in which one piece of equipment relates to other pieces of equipment will be described in detail below. As shown on Figures 2-2 and 2-3, the cleanup equipment is located in the plant structure such that the Contactor is located above the Cracker and the Cracker is located above the Regenerator. Above the Contactor and below the Regenerator there are lockhoppers; these lockhoppers make possible the operation of the clean up process at pressure with recirculation of the sorbent. Rotary feeders control the flow of lime sorbent pebbles into the Contactor and out of the Regenerator. These five vessels of the clean up system are pressure coded for operation up to 350 psig.

In addition to these five pressure vessels, stacked in the structure of the PDU, the gas clean up system includes

- two surge hoppers operating at atmospheric pressure -- one at the top of the stack to feed the sorbent supply lockhopper, and the other at the bottom to receive sorbent from the Regenerator outlet lockhopper.
- a screen at the top of the pebble sorbent lift to remove the fines.
- a compressor for the Regenerator outlet gases leaving the sulfur Condenser so that they might be returned to the Gasifier, or possibly to the Contactor.

In the 48 hour, continuous run of the Calderon coal process PDU the rich and lean gases were combined; they flowed together to the Contactor for clean up. The Cracker was not operated since cracking of the rich gas occurred on mixing with the high temperature lean gas. Also the sorbent Regenerator was not operated during the 48 hour run. It was decided that the plant operation should be simplified to concentrate on the most essential parts of the overall process. The spent lime pebble

sorbent, CaS along with unreacted CaO, was accumulated and stored for a separate run of the Regenerator, carried out subsequently to the 48 hour run.

Contactor. The Contactor is a refractory lined pressure vessel, built in the fabricator's shop, and shipped by truck as a complete assembly. It is a tall vessel with a dished head at the top and a cone at the bottom. Its lining is VSL-50 insulation and Greenpak 70 refractory made by A. P. Green Refractory Company. The Contactor has five main nozzles: one at the top through the head through which sorbent pebbles enter, a second on the side at the top just below the head through which the cleaned gases leave, a third nozzle just above the cone through which gases enter, a fourth at the side of the cone through which spent pebbles leave, and a fifth at the apex of the cone through which the auger controlling pebble flow through the bed is driven. The inside of the Contactor is lined with a composite lining made up of insulation and refractory to withstand a temperature of 2500°F. The outside shell of the Contactor does not have external insulation. The avoidance of insulation around the outside of the vessel is to prevent the overheating of the pressure shell. The outer shell of the Contactor is carbon steel.

Cracker. The Cracker is another pressure vessel of the same dimensions as the Contactor with four main nozzles. The upper nozzle is to receive the sorbent delivery pipe; this nozzle is situated in the head of the vessel. The second nozzle is located at the top of this vessel below the head and to the side; this is to provide the outlet for the clean, cracked rich gas. The third nozzle on the side above the external cone is to serve as the inlet for the raw rich gas. The fourth nozzle is situated at the bottom of the cone with an extension in the form of a delivery pipe to feed sorbent

pebbles to the Regenerator. The Cracker is refractory lined similar to the Contactor. The Cracker was blanked off and not used in the 48 hour run of the PDU; sorbent pebbles were ducted directly from the Contactor through the Regenerator, its lockhopper, and surge hopper into storage.

Regenerator. The Regenerator is similar to both Contactor and Cracker in its dimension and shape. It also is completely fabricated in the fabricator's shop and shipped in one piece by truck. It possesses the same insulation as both Contactor and Cracker and is equipped with an external cone at the bottom and a head at the top. It has two nozzles for the sorbent, one in the head and one at the bottom discharge of the external cone, and three nozzles to the side. The one nozzle at the side is located at the top of the barrel for the Regenerator gas outlet and the other two are located at the bottom of the barrel; one of these bottom nozzles is for a combination of air and recycle gas from the Condenser outlet, if the combustibles in this gas are sufficiently low. The other nozzle is for an inert diluent gas which may be required if the combustible content of the recycle gas consumes the O2 of the air and causes excessively high temperatures in the Regenerator. The upper plenum serves to collect Regenerator gas before discharging it to the sulfur condenser. The lower plenum serves to distribute the air, tail gas and diluent used in the regeneration of the sorbent. Figures 2-2 and 2-3 show the bottom of the Regenerator with the sorbent feeder below it. This feeder controls the rate of movement of the sorbent through the Regenerator.

General. The Contactor, Cracker and Regenerator also have other secondary nozzles which are used for measuring the temperature and pressure, equalizing the

pressure equalization, and venting gases. The Contactor and Regenerator are mounted on springs and side guides to permit the vessels to grow during heating. Provisions are made in the steel structure to accept the vessels and their movement. The position of the Cracker is fixed in the structure.

Condenser. The sulfur condenser is a kettle type condenser commonly used in the oil refinery industry. It is designed as a pressure vessel to withstand an operating pressure of 350 psig. It possesses a bundle of tubes with a tube sheet at each end. A sulfur collection leg is provided at the outlet end of the condenser to collect the liquid S. The leg is designed to be jacketed for steam to maintain it at 275°F in a molten state. A demister with a heating coil below is provided above the collection leg to minimize the sulfur fog in the tail gas. A compressor in the gas outlet from the Condenser recirculates this exit gas to the Gasifier. The Condenser and its outlet gas compressor were not operated in either the 48 hour run or the subsequent regenerator test of the Calderon PDU.

Section 3

PROCESS DEVELOPMENT UNIT, PDU, SHAKE-DOWN

Construction of the PDU in Alliance, Ohio was completed in November 1990. Individual items of plant equipment were first checked out and operated to assure safe and effective operation of the larger sections of the PDU. Then equipment groups involved with each of the critical process steps -- coal pyrolysis, char gasification, and hot gas cleanup -- were operated and their performance investigated.

3.1 Problems Encountered and Corrected

During this process testing problems involved with the equipment and its operation were discovered and corrected. The culmination of these successful efforts was

- the 48 hour continuous, steady state operation of the combined Pyrolyzer, Gasifier, and Contactor sections of the Calderon coal PDU between 30 September and 3 October 1992.
- the operation of the Regenerator (actually the Contactor vessel serving as a Regenerator) between 20 and 22 April 1993 on spent lime pebble sorbent produced in the 48 hour run of the PDU.

But preliminary to these operations, during equipment and plant shake down period, the following problems were encountered and solved.

Lime Pebble Lift. The vertical flight conveyor, originally installed in the PDU to lift the regenerated lime and the fresh limestone pebbles 180 ft from ground level to the top of the structure for charging into the surge hopper, caused severe attrition of the pebbles and loss of sorbent. This conveyor was replaced by a pneumatic conveyor which periodically blows dense packets of pebbles through a vertical pipe to the top of the PDU. Tangential poke holes for

rodding and for air blasting were added in the piping of the pneumatic conveyor to clear occasional blockages by fines from sorbent pebble attrition. The availability of the vertical lift system for the sorbent pebbles now exceeds 90%. The vibrating screen which separates fines from the sorbent pebbles was relocated to the top of the PDU structure to avoid difficulties with flow of the pebbles down through the hoppers, Contactor, Cracker, and Regenerator of the Gas Clean Up system.

Refractories. The refractory in the Contactor failed -- spalled and crumbled; hot spots developed on the exterior shell of the vessel. This refractory, apparently improperly installed, was removed and replaced by a castable of higher alumina content. The new refractory in the Contactor has held up satisfactorily since its installation. The refractory installed at the base of the Air Blown Slagging Gasifier, surrounding its cylindrical slag tap, has caused more serious problems. Here the refractory must withstand a temperature between 2600 and 2800°F to maintain the slag molten as it leaves through the slag tap. Initially a 94% alumina refractory castable capable of temperatures up to 3400°F, Greencast 94, was used. This refractory did not perform well; the slag permeated it and destroyed its structure. Trials of five other refractories failed. Then the A. P. Green 9C refractory, an ultra low cement castable, was installed in the Gasifier. This refractory has performed well. A replaceable spool insert was designed and constructed for quick repair at the base of the Gasifier. The spool contains the slag tap -- the cylindrical, electrical induction heated, silicon carbide susceptor -- surrounded by the 9C refractory. This Gasifier bottom arrangement has provided good service throughout the PDU runs.

Plugging of PDU Lines and of Equipment by Coal Tars and Char Fines. Initial runs of the PDU were seriously affected by condensation of tar from the volatile matter of the coal on the

inner surfaces and contents of the equipment. If this tar was allowed to accumulate and harden, the lines soon plugged with agglomerates of tar, carbon, and char particulates. The largely successful preventative practices developed in the PDU shake down phase are

- to preheat the lines and vessels of the PDU to the extent possible with hot gases from an auxiliary burner installed in the Gasifier before establishing the flow of coal volatiles from the Pyrolyzer.
- to flush the lines and vessels with high pressure, high temperature steam both prior to start up and after shut down of the PDU. An operating procedure involving the use of steam blown at pre set intervals after PDU shut down proved helpful in removing the tars deposited from coal volatiles evolved by pyrolysis occurring after shut down.

The plugging of the cyclone dipleg with tar and fines was experienced from the beginning of the PDU shake down phase. The dipleg is cooled so that char fines removed in the cyclone can be removed at a moderate temperature from the system. Tars in the gases flowing through the cyclone were, therefore, condensed in the dipleg. Attempts to prevent such tar condensation and line pluggage have thus far proved unsuccessful to date. Consideration is being given two possible remedial measures

- insulating the dipleg and returning the hot char particles captured in the cyclone directly to the Gasifier by means of a closed transport system.
- flowing steam up the dipleg at a rate high enough to prevent the incursion of tars into the dipleg, low enough to avoid reversing the downward flow of the particles.

The failure of the cyclone increased the char particle loading of the mixed rich and lean gases entering the sorbent pebble bed of the Contactor during the 48 hour run. While this bed effectively removed these char particles, increased pebble flow rates were required to maintain a low pressure drop over the Contactor.

The plugging of the bottom of the Contactor with tar and with the char fines which the cyclone has failed to collect presented the most serious problem encountered in the initial operation of the PDU. The lean gas from the Gasifier contained coal volatiles and tars since these were not completely removed from the char in the Pyrolyzer. (Certainly the mixed rich and lean gas flowing to the Contactor in the 48 hour run contained volatiles, and tar was a component of those gases.) The tars and fines lodged in the interstices of the pebble sorbent bed, increased the pressure drop over the bed, and after six or seven hours plugged it. Such plugging prevented the downward flow of the sorbent and the upward flow of the gas. The Contactor ceased to function -- to desulfurize the gas and to heat and calcine the sorbent pebbles. To solve this persistent problem, four corrective measures were applied

- to preheat, in PDU start up, the sorbent pebbles in the Contactor by combustion gases from the auxiliary burner in the Gasifier.
- to maintain, throughout a run, the fuel gas temperature entering the Contactor above the tar condensation temperature.
- to provide the Contactor with an air supply port which enables the temperature in the vessel to be increased, if necessary to prevent tar condensation, by burning a portion of the fuel gas passing through it.
- to provide the Contactor at its base with a water cooled auger which provides for positive control of pebble flow out of the vessel.

These measures proved successful in maintaining continuous, effective operation of the Contactor throughout the 48 hour run.

Large Char Agglomerates at the Pyrolyzer Outlet. It was observed that when the Pyrolyzer is shut down, the hot char continued to evolve volatiles containing tars at a gradually reducing

rate. These volatiles and tars tended to produce large char agglomerates, boulders, at the high temperature char exit of the Pyrolyzer. When coal flow into the Pyrolyzer and char flow out of it were initiated in the subsequent run, boulder size lumps emerged which obstructed char flow through the Char Guide into the Gasifier. The solution to this problem was the installation of breakers at the end of the Pyrolyzer, which fracture the friable char boulders.

Burner Failures. Auxiliary natural gas burners operating at pressure provide hot combustion product gases to the Pyrolyzer and the Gasifier. The first of the problems encountered with these burners were water condensation and the consequent fogging of the fire eye protective system at burner start up. Blowing of the burner lines and the cleaning of the fire eyes prior to start up made the burners quite dependable. Cracking of an alloy pipe interconnecting the burner to the Pyrolyzer tube occurred at the beginning of the PDU shake down. Replacement of this pipe and shortening of the purge line solved this problem.

Water Freezing in Air Lines. During cold weather, moisture in the process air collected and froze in the both process and instrument air lines of the PDU, obstructing the flow. This problem was simply corrected by blowing down the water collected in the accumulator tanks for both the low pressure and the high pressure air.

3.2 Comments

The problems encountered and corrected in the shake down of the Calderon coal PDU are not deemed serious considering that novel technologies have been incorporated in the plant for producing and cleaning rich synthesis and lean fuel gases from run of mine, high sulfur caking coal. In categorizing these problems: five problems are attributed to movement of solids; three, to tar build-up; two, to refractories failure; one, to weather; one, to moisture; and one, to

mechanical malfunction. But these problems exhausted project funds and, as a result, caused a PDU shut down lasting 14 months. Additional funding of $1.368 million was made available by the U. S. Department of Energy for fiscal year 1992, on condition that the funding be expended in two phases. Phase 1 would provide $968,000 to cover PDU modifications and a test run of 48 hours to provide a proof of principle for the Calderon process; Phase 2 would provide $400,000 after the Department of Energy's acceptance of the 48 hours test.

Changes to the PDU were designed and incorporated in the PDU during the first half of 1992. In order to maintain expenditures within the funding provided these modifications were limited to

- the addition of an auger in the Contactor for lean gas; the ducting of both rich and lean gases to the Contactor and of its pebble flow to the Regenerator; the blanking of the Cracker.
- the addition of an air nozzle port to the Contactor, providing for heat addition by combustion to prevent tar condensation and to assist limestone pebble calcination.
- the addition of an induction heated cylindrical slag tap to the Gasifier.
- the location of an auxiliary burner at the base of the Gasifier.

The cost of the above PDU modifications were estimated. The work was completed within the 1992 budget.

Agreement was reached in August 1992 with the Department of Energy on criteria for a successful 48 hour, proof of principle run of the Calderon PDU. The basic requirements were the following

- The Calderon PDU Pyrolyzer, Gasifier, and Contactor would be operated continuously as a unit at steady state for a period of 48 hours. The plant would process Ohio bituminous coal and use dolomitic limestone pebbles for gas cleaning.

- Continuous would mean that the interruptions in PDU operation due to mechanical or other difficulties would total less than 8 hours.
- Steady state would mean that the principle process conditions -- pressures, temperatures, and flows would deviate less than 10% in the course of the 48 hour run.
- The Regenerator would be operated subsequently to process the sorbent pebbles processed in the 48 hour run.

This 48 hour test run of the Calderon PDU was conducted between 30 September and 3 October 1992 with Mr. Daniel Cicero of the U. S. Department of Energy and Dr. David Archer of Carnegie Mellon University as observers. On 19 October 1992, the U. S. Department of Energy Morgantown Energy Technology Center notified Calderon by letter that the 48 hour test was accepted.

Section 4

FORTY EIGHT, 48, HOUR TEST

The Congressional Resolution which appropriated funds for extended operation of the Calderon PDU in 1992 required a continuous 48 hour test as a proof of principle for the process. The U. S. Department of Energy and Calderon agreed on the terms of this test given in Section 3 of this report.

4.1 Preparation for Test

Test Materials. Both coal and dolomitic limestone were delivered to the Alliance, OH, site by truck several weeks before starting the test. The seam and analysis of the coal are described in letters shown on pages 4-2 and 4-3; and the analysis of the dolomitic limestone pebbles, on page 4-4.

Preliminary Preparations. During the week of 21 September 1992 preparations began for the test. A punch list was used in checking out the boiler, the instrument air compressor, the primary process air compressors, the booster air compressor, the natural gas compressor, the hydraulic pumps and valves, the ball valves on the lockhoppers, the remote operated valves, the slag quench water pumps and valves, all rotating equipment such as feeders, the coal pushing mechanism, all burners and their auxiliaries, the slag nozzle induction heater, the start up gas by pass, the cyclone, the sorbent lift, the coal skip hoist, the vibrating screen and knock-out drum. All thermocouples were also checked, including the equipment at the operator's station and at the laboratory's gas chromatograph. The safety equipment was checked such as the Scott packs, the gas sniffers and the first aid kits. The walkie talkies and the plant fire and CO alarms were also checked. Steam hoses were checked to insure their availability in case of fire.

These activities occupied the entire week of September 21.

CENTRAL FUEL COMPANY

POST OFFICE BOX 165
NEW PHILADELPHIA, OHIO 44663

July 31, 1992

Calderon Energy Company, PDU Site, Gate #2
1400 S. Mahoning Ave.
Alliance, Oh 44601

I hereby certify that this page together with the attached analysis sheet represents the quality and description of the coal provided to Calderon Energy on August 3, 1992.

Size: 1 1/4" x 3/8"

Seams: Tionesta (3A)
Upper Kittanning (#6)
Middle Kittanning (#5)
Blended to achieve desired quality.

Mine: Central Fuel Company
Stonecreek Mine
County Road 55
New Philadelphia, OH 44663

Keith B. Kimble, President

Witnessed and Officially sealed on this 31st day of July, 1992.

Notary Public
My commission expires 11/9/96

REAM & HAAGER LABORATORIES

1226 KADERLY STREET NW NEW PHILADELPHIA, OHIO 44663-1297 (216) 343-3711

JULY 30, 1992

LABORATORY NO.: 214504

DATE RECEIVED: JULY 29, 1992

ANALYSIS OF: COAL - WASHED STOKER #6,3A &.#5 BLEND - 7/29/92

RECEIVED FROM: CENTRAL FUEL
BOX 165
NEW PHILADELPHIA, OHIO 44663

REPORTED TO: SAME

	AS RECEIVED	DRY
MOISTURE	7.36%	-
ASH	6.42%	6.93%
VOLATILE MATTER	37.40%	40.37%
FIXED CARBON	48.82%	52.70%
SULFUR	2.87%	3.10%
HEAT CONTENT	12,519 BTU/lb	13,513 BTU/lb
MAF		14,519 BTU/lb

ASH FUSION DATA

INITIAL DEFORMATION	1993 °F	FREE SWELLING INDEX
SOFTENING (H=W)	2023 °F	
SOFTENING (H=1/2W)	2280 °F	GRINDABILITY INDEX
FLUID TEMPERATURE	2392 °F	

J. F. Orlando

J. F. ORLANDO

Maximum potential (SO2) in stack gas = 4.35 lbs/megBTU

EAST OHIO STONE CO.

Corner of Sawburg and Beeson
State Specification Limestone Aggregates
Phone (216) 823-4646
P.O. Box 3805 • 2000 West Beeson • Alliance, Ohio 44601

LIMESTONE AGGREGATE SIZES

AGGREGATE NO.	SPECIFICATIONS
1	4" to 2"
4	1½" to ¾"
57	1" to ¾"
8	3/8" to 3/16"
9	3/16" to 1/16"
703	Sand
304	1½" to Dust

ALL MATERIALS MEET STATE SPECIFICATIONS

Spectrochemical Testing Inc.
Home - 157 Harvey Street, (216) 755-5433
Laboratory - 179 State St. (216) 755-7373
Struthers, Ohio 44471

(4) Dolomite samples rec'd Aug. 21 & 28, Sept 4 & 10 for chemical analysis

Date	8-21	8-28	9-4	9-10
Fe2O3	0.20	.25	.25	.15
S	0.08	0.08	0.05	0.05
SiO2	0.15	0.13	0.13	0.10
Al2O3	0.20	0.20	0.10	0.10
CaO	30.80	30.80	30.70	30.90
MgO	21.40	22.00	21.70	22.00
TiO2	0.01	0.01	0.01	0.01
MnO	0.01	0.01	0.01	0.01
P2O5	0.01	0.01	0.01	0.01
L.O.I.	48.72	47.70	48.28	47.36

Frank A. Galletta, Mgr.

The results reported are limited to the sample tested and constitute data only with respect to the sample tested. Information and data in this report are correct and reliable to the best of our knowledge, however, results are not guaranteed and no responsibility is assumed.

Initial Operations. Eleven, 11, tons of limestone were lifted by the pneumatic system to fill the Contactor, the lockhopper above it, and the surge hopper above the lockhopper. The bottom lockhopper and the bottom surge hopper were left empty. Since the rich gas from the Pyrolyzer was to be mixed with the lean gas from the Gasifier for clean up in this test, the Cracker was blanked and bypassed; sorbent pebbles leaving the Contactor were ducted directly to the Regenerator.

In the afternoon of the 28 September 1992 a meeting was held with the operators and maintenance personnel explaining in detail the test, and at 18:10 the compressors for gas and air, the burner for heating the Pyrolyzer, and the electrical induction coil for heating the slag nozzle were turned on. The Pyrolyzer temperature selected for processing the coal was attained on Tuesday, 29 September 1992 at 22:00. The burner for preheating the bottom of the Gasifier was turned on at 22:02; the boiler was put on line at 22:25; the hydraulic pumps were started at 23:21. Pushing of coal into the Pyrolyzer and thus char into the Gasifier was initiated at 23:59. On 30 September 1992 at 15:06 the char level in the Gasifier, indicated by the nuclear detector, was 22.5 ft in the 26.7 ft high vessel. The air supply to the tuyeres was turned on, and gasification was begun. The test officially started at 15:06 and ended on 3 October 1992 at 19:06, a period of 76 hours.

The significant occurrences during the test are indicated on the trace of the PDU system pressure recorded by the computerized data acquisition system reproduced on page 4-6. The PDU is designed to operate at 350 psig; but for safety and ease of operation it was decided to maintain the pressure at 45 psig initially. During the 48 hour, continuous, steady state phase of the run the pressure was increased 70 psig as shown on the trace of system pressure.

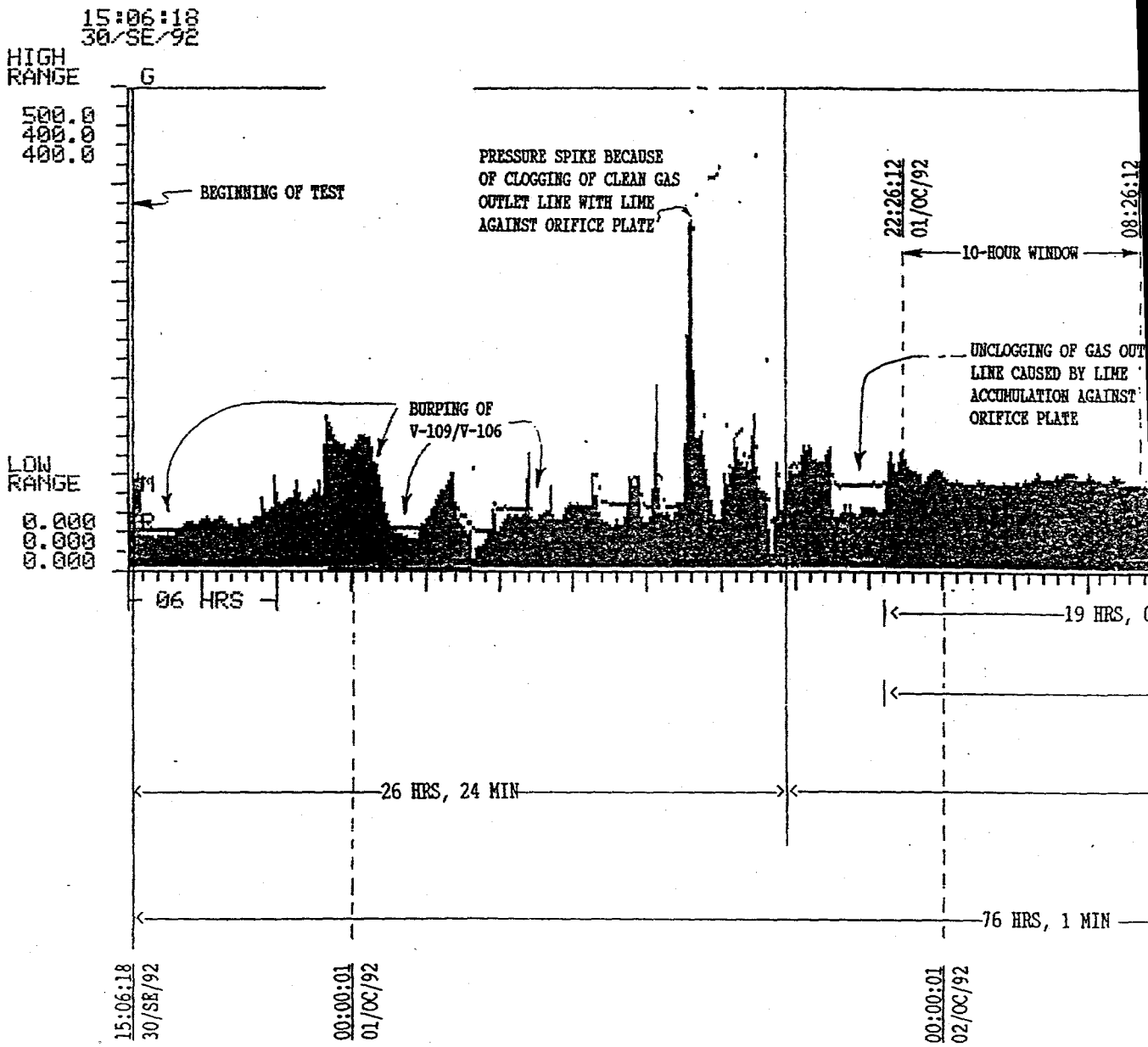
15:06:18
30/SE/92
HIGH RANGE
G
500.0
400.0
400.0
BEGINNING OF TEST
PRESSURE SPIKE BECAUSE OF CLOGGING OF CLEAN GAS OUTLET LINE WITH LIME AGAINST ORIFICE PLATE
22:26:12
01/OC/92
08:26:12
10-HOUR WINDOW
UNCLOGGING OF GAS OUT LINE CAUSED BY LIME ACCUMULATION AGAINST ORIFICE PLATE
BURPING OF V-109/V-106
LOW RANGE
0.000
0.000
0.000
06 HRS
19 HRS,
26 HRS, 24 MIN
76 HRS, 1 MIN
15:06:18
30/SE/92
00:00:01
01/OC/92
00:00:01
02/OC/92

4.2 Start of Test

During the start up of the test the limestone sorbent pebbles did not flow readily from the upper lockhopper into the Contactor. To make the pebbles flow, the lockhopper was pressurized with air; then a valve in the connecting line was opened allowing the air and entrained pebbles (3/8 to 3/4 inch diameter) to rush into the Contactor. This procedure had to be repeated continually; it was, therefore, impossible to reach a steady state pressure in the PDU. Furthermore, it was discovered that the rapid depressurization of the lockhopper and gas rush into the Contactor carried pebbles into the gas stream discharged from the Contactor to the flare. These pebbles and pebble fines eventually blocked the discharge and caused a rapid pressure rise in the system. The system pressure was set at 45 psig; but it rapidly reached 321 psig. Two relief valves were manually opened to the atmosphere, to reduce the system pressure. It was then found that the orifice plate upstream of the system pressure control valve in the Contactor discharge line was clogged with lime entrained in the gas stream during the depressuring of the upper lockhopper. A section of pipe was unbolted and the lime fines were blown from the orifice plate to unclog it; this procedure required 126 minutes. A vibrator was installed on the spool below the lockhopper valve leading to the Contactor. The vibrator solved the limestone flow problem.

The process then operated at steady state for 19 hours and 2 minutes until on 2 October 1992 at 16:30 the system pressure dropped for 14 minutes. This incident occurred when an operator mistakenly opened the lower valve of the bottom lockhopper while the upper valve was still open. The error was discovered and corrected, and the system pressure was restored.

At about 20:00, difficulties were encountered in moving the piston which feeds coal into the Pyrolyzer; this problem became aggravated, and at 22:33 it was decided to stop pushing coal and gasifying char. The first possibility considered was that the Char Guide might be obstructed by

a char boulder. A port located on top of the Char Guide was opened in order to inspect it; the Char Guide was clear. Upon further investigation, it was found that a valve in the recirculation line of the hydraulic fluid loop was closed rather than open as required for piston operation. It was concluded that vibration caused this valve to gradually close and therefore stop the flow of hydraulic fluid into the pushing cylinder. Once this valve was opened and secured with a bolt in the open position, the process operated at steady state without interruptions. The discovery and correction of this mechanical malfunction caused a loss of 1 hour and 48 minutes.

The PDU was then able to continue operation at steady state until it was intentionally shut down on 3 October 1992 at 19:07 when Mr. Dan Cicero, the U. S. Department of Energy Project Manager who observed the test, stated that he was satisfied with operation of the 48-hour run.

4.3 Test Proper

During the first 26 hours and 24 minutes of the 76 hours of PDU operation, steady state operating conditions could not be established; but during the remaining 49 hours and 36 minutes of the test operation steady state operation was maintained with but three interruptions which totaled 4 hours and 8 minutes (126 minutes, 14 minutes, and 108 minutes). The chart on page 4-6 illustrates that following each interruption, the time required for the PDU to return to steady state was minimal. The process is controllable and amenable to turn down; the PDU has demonstrated the capability of quick response and return to the desired level of operation.

48 Hour Test Conditions. The data trace on page 4-9, 29 PYROLYZER, Screen #0, shows the steady state PDU system pressure, 68 psig, throughout a 10 hour period beginning 1 October 1992 at 22:26. The temperature of the Hot Gas Clean Up, indicated in the upper right hand corner, was 1918°F. (The PDU was started up at 45 psig pressure; however, it was found that

29 PYROLYZER

2 MIN (C4)

08:26:17
02/OC/92

TI-E102B
1918.
DEGF

HIGH RANGE
500.0
400.0
400.0

LOW RANGE
0.000
0.000
0.000

G
M
P

-10 HRS -08 -06 -04 -02 0

22:26:12
01/OC/92

08:26:12
02/OC/92

FI107 G
1227.
@ 0.000 AO
HOT AIR AV
FLOW TO
TUYERES

PI101 R
67.72 PSI
@ 0.000 AO
LEAN GAS AV
FROMPYRO
PRESSURE

PI103 M
68.48
@ 0.000 AO
RICH GAS AV
FROMV101
PRESSURE

ALARMS

PSL102
TI106
LIC107
TIC106
E101-15
LIC139
FIC158
AUTOLIMB
AUTOLIMT
AUTOSLAG
PY103AL

SCREEN #0

the higher pressure better stabilized PDU operation.) The air flow to the tuyeres of the Gasifier was held constant during the entire test, except for the interruptions mentioned above.

The PDU operating conditions during the 48 hour continuous, steady state test are illustrated on screens taken from the computerized plant operating and data acquisition system shown on pages 4-11, 4-12, 4-14 and 4-15. They were obtained during PDU operations on 3 October 1992, near the end of the 48 hour test. The screens will be discussed further to indicate certain aspects of the performance of the Calderon coal Pyrolyzer, char Gasifier, and Hot Gas Clean Up System.

PYROLYZER AND H101 BURNER, Screen #1, illustrates operating conditions at 17:57. The coal feed charging tube (V-AM-1), the Pyrolyzer (E-101), the Char Guide (V-101 and SP-8), and natural gas burner (H-101) comprise this screen. The pushing piston in V-AM-1 is in the retracted position. The time remaining until next charge is 177 seconds; the total number of coal charging cycles during the test up to that present time is 477 (left hand bottom corner); and the PDU system pressure is 72.9 psi (P1-103). The burner (H-101) which supplies the heat for pyrolysis, has a combustion chamber (TI-145) temperature of 1709°F.

GASIFIER & H102, Screen #2, illustrates the operating conditions of the Gasifier and its auxiliary burner at 17:58 The level of char solids in the Gasifier (V-102) is 24.1% (LI-107). The auxiliary start up burner (H-102) is OFF and the coil power is ON at the slag tap spool (SP-11). The flow of air in the tuyeres is shown at 1211 lb/hr (FI-107) and the air flow for adjusting, increasing, temperature at top of Gasifier is 157 lb/hr (FI-106). The temperature at the top of the Gasifier can also be reduced by adding steam; this flow is shown to be negligible, 8.6 lb/hr (FI-108).

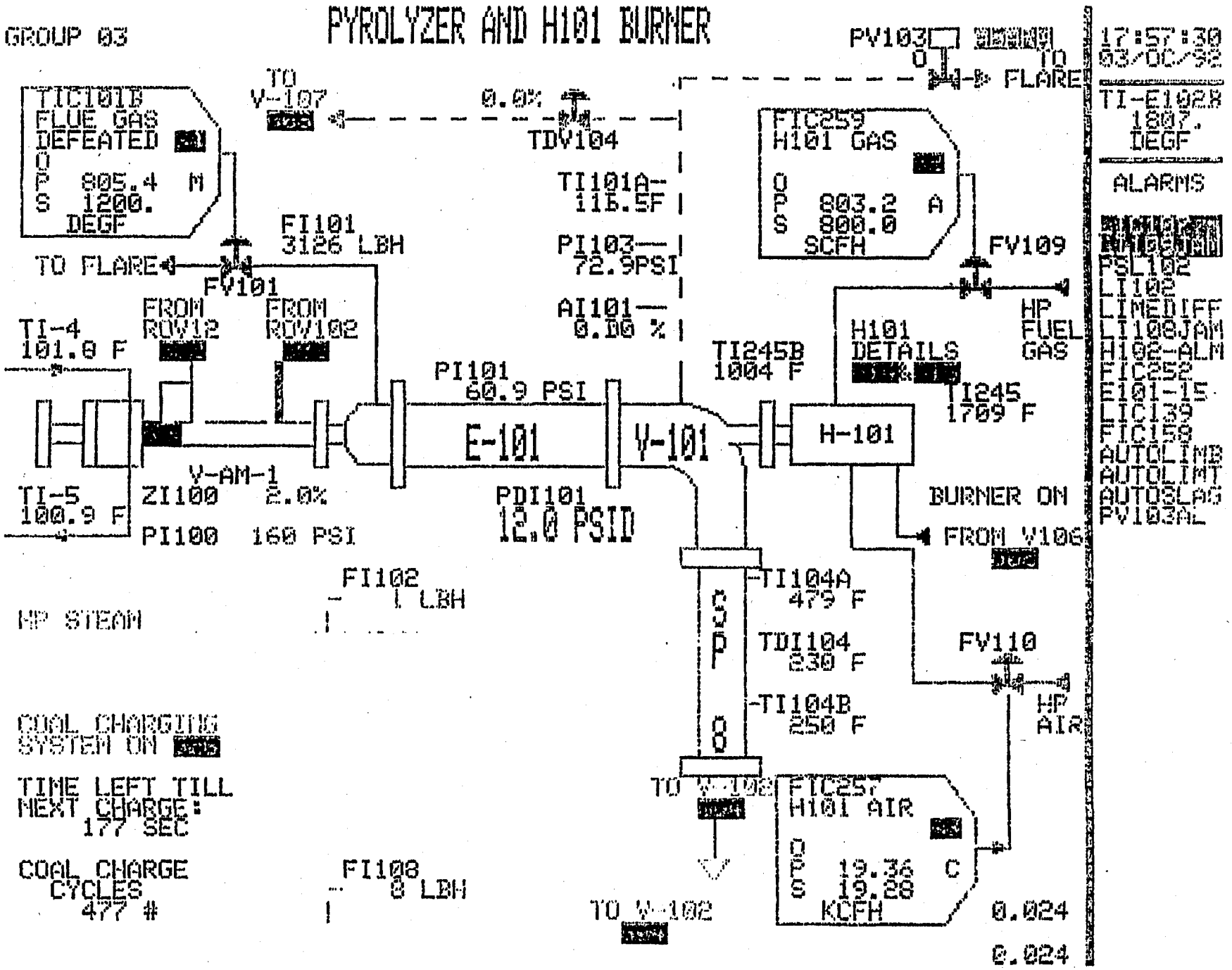
GROUP 03
PYROLYZER AND H101 BURNER
17:57:30
03/OC/92
TIC101B
FLUE GAS
DEFEATED
O
P 805.4 M
S 1200.
DEGF
TO
V-107
0.0%
TDV104
TI101A
115.5F
PI103
72.9PSI
AI101
0.00 %
PV103
O
TO
FLARE
FIC259
H101 GAS
O
P 803.2 A
S 800.0
SCFH
FV109
TI-E102B
1807.
DEGF
ALARMS
PSL102
LI102
LIMEDIFF
LI108JAM
H102-ALM
FIC252
E101-15
LIC139
FIC158
AUTOLIMB
AUTOLIMT
AUTOSLAG
PV103AL
TO FLARE
FV101
FI101
3126 LBH
FROM
ROV12
FROM
ROV102
TI-4
101.0 F
TI-5
100.9 F
V-AM-1
ZI100 2.0%
PI100 160 PSI
PI101
60.9 PSI
E-101
V-101
PDI101
12.0 PSID
TI245B
1004 F
H101
DETAILS
TI245
1709 F
H-101
HP
FUEL
GAS
BURNER ON
FROM V106
FI102
1 LBH
HP STEAM
TI104A
479 F
TDI104
230 F
TI104B
250 F
FV110
HP
AIR
COAL CHARGING
SYSTEM ON
TIME LEFT TILL
NEXT CHARGE:
177 SEC
COAL CHARGE
CYCLES
477 #
FI108
0 LBH
TO V-102
TO V-102
FIC257
H101 AIR
O
P 19.36 C
S 19.28
KCFH
0.024
0.024

SCREEN #1

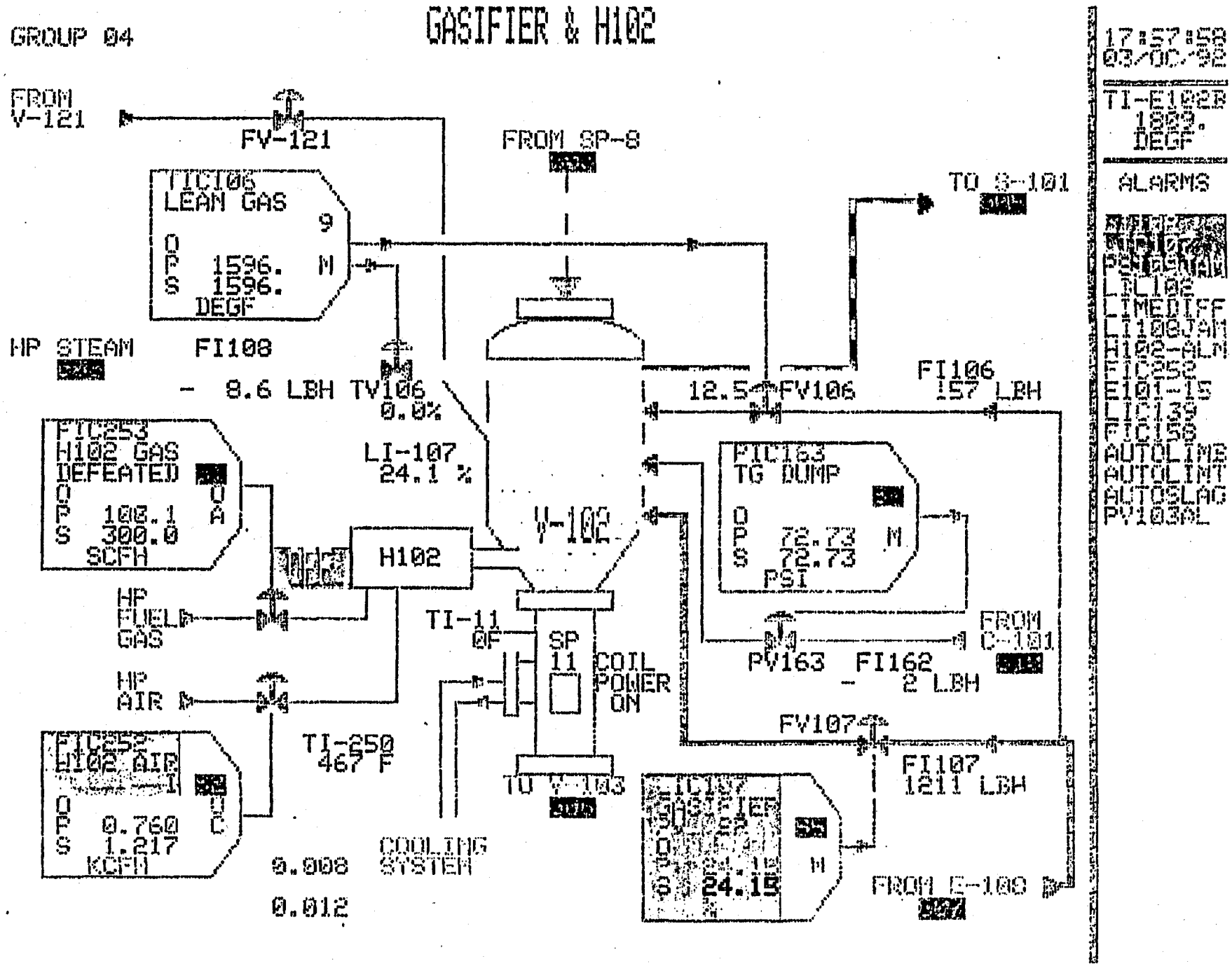
GROUP 04
GASIFIER & H102
17:57:58
03/OC/92
TI-E102B
1809.
DEGF
ALARMS
FROM
V-121
FV-121
FROM SP-8
TO G-101
TIC106
LEAN GAS
9
O
P 1596. M
S 1596.
DEGF
HP STEAM
FI108
- 8.6 LBH
TV106
0.0%
12.5
FV106
FI106
157 LBH
FIC253
H102 GAS
DEFEATED
O
P 108.1 A
S 300.0
SCFH
LI-107
24.1 %
W-102
H102
FIC163
TG DUMP
O
P 72.73 M
S 72.73
PSI
HP
FUEL
GAS
TI-11
0F
SP
11
COIL
POWER
ON
FROM
C-101
PV163
FI162
- 2 LBH
HP
AIR
FV107
FI107
1211 LBH
FIC252
H102 AIR
I
O
P 0.760 C
S 1.217
KCFH
TI-250
467 F
TO V-103
FICIV7
GASIFIER
SP
O
S 24.15 M
0.008
0.012
COOLING
SYSTEM
FROM E-100
LIL102
LIMEDIFF
LI108JAM
H102-ALM
FIC252
E101-IS
LIC139
FIC158
AUTOLIMB
AUTOLIMT
AUTOSLAG
PV103AL

SCREEN #2

CYCLONE, Screen #3, illustrates the operating conditions around this device for removal of char particles from fuel gases leaving the Gasifier at 17:58. The Cyclone (S-101) shows a gas exit temperature of 1590°F (TI-106) upstream of the orifice plate FO-127; this orifice insures a significant positive differential pressure between the Pyrolyzer/Gasifier sections of the PDU and the Hot Gas Clean Up section. The temperature at the base of the cyclone is 83°F (TI-S101); this low temperature indicates that no gas or particles are flowing at the bottom of the cyclone and thus no discharge of gas into the atmosphere through the start-up by-pass (BP-1) and no removal of collected char particle fines into the drum through the valve (ROV 110). In starting operations, the gas is first vented into the atmosphere through the bottom of the cyclone, then through the by pass (BP-1) until a temperature of 1500°F is attained before directing the gas to the Hot Gas Clean Up System (V-106).

CONTACTOR/CRACKER, Screen #4, illustrates the operating conditions of the Hot Gas Clean Up system at 18:12. (The data acquisition for Screen #4 had to be delayed until Screens #1 through #3 were printed.) The Contactor/Cracker (V-106) removes both particulates and sulfur, H2S, from the fuel gases, operating as a moving pebble bed filter and sorber. In addition, the bed provides for

- calcination of fresh limestone, CaCO3, feed pebbles forming lime, CaO, pebbles.
- cracking hydrocarbons of the coal volatiles, including tars, forming hydrogen, H2, and carbon, C.

The pebbles (3/8 to 3/4 inch diameter) are continuously moved downward and out of the Contactor (V-106) by means of an air cooled auger (VAM-A) in order to provide a controlled operation of the Hot Gas Clean Up system. The auger is made of high temperature alloy to withstand a maximum temperature of 1800°F, but it is operating at a lower temperature, 1433°F

GROUP 05

CYCLONE

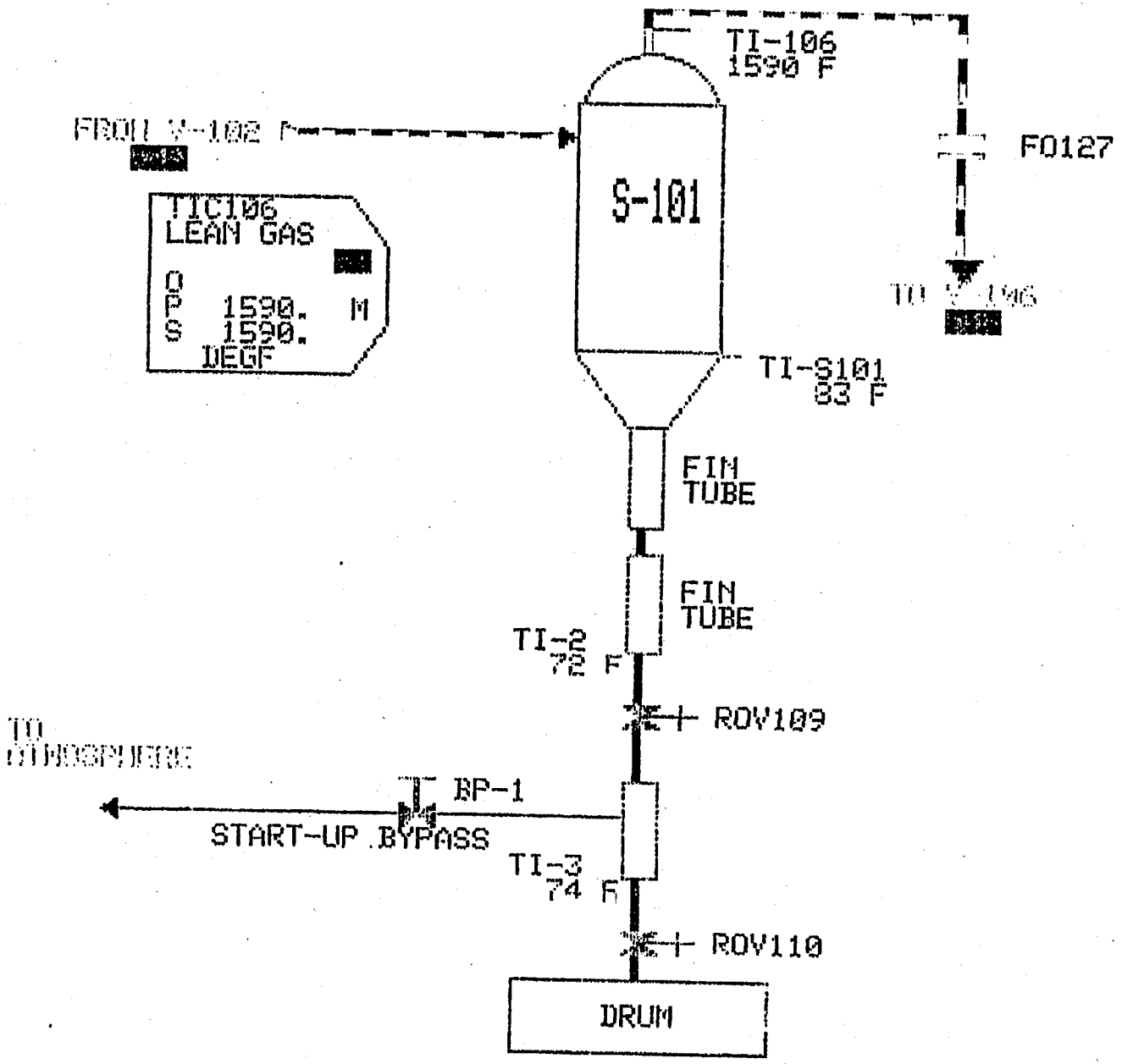

17:58:06
03/OC/92

TI-E102B
1010.
DEGF

ALARMS

PSL102
LIMDIFF
LI108JAM
H102-ALM
TIC252
E101-TE
LIC139
FIC158
AUTOLIMB
AUTOLIMT
AUTOSLOC
PV103AL

SCREEN 43

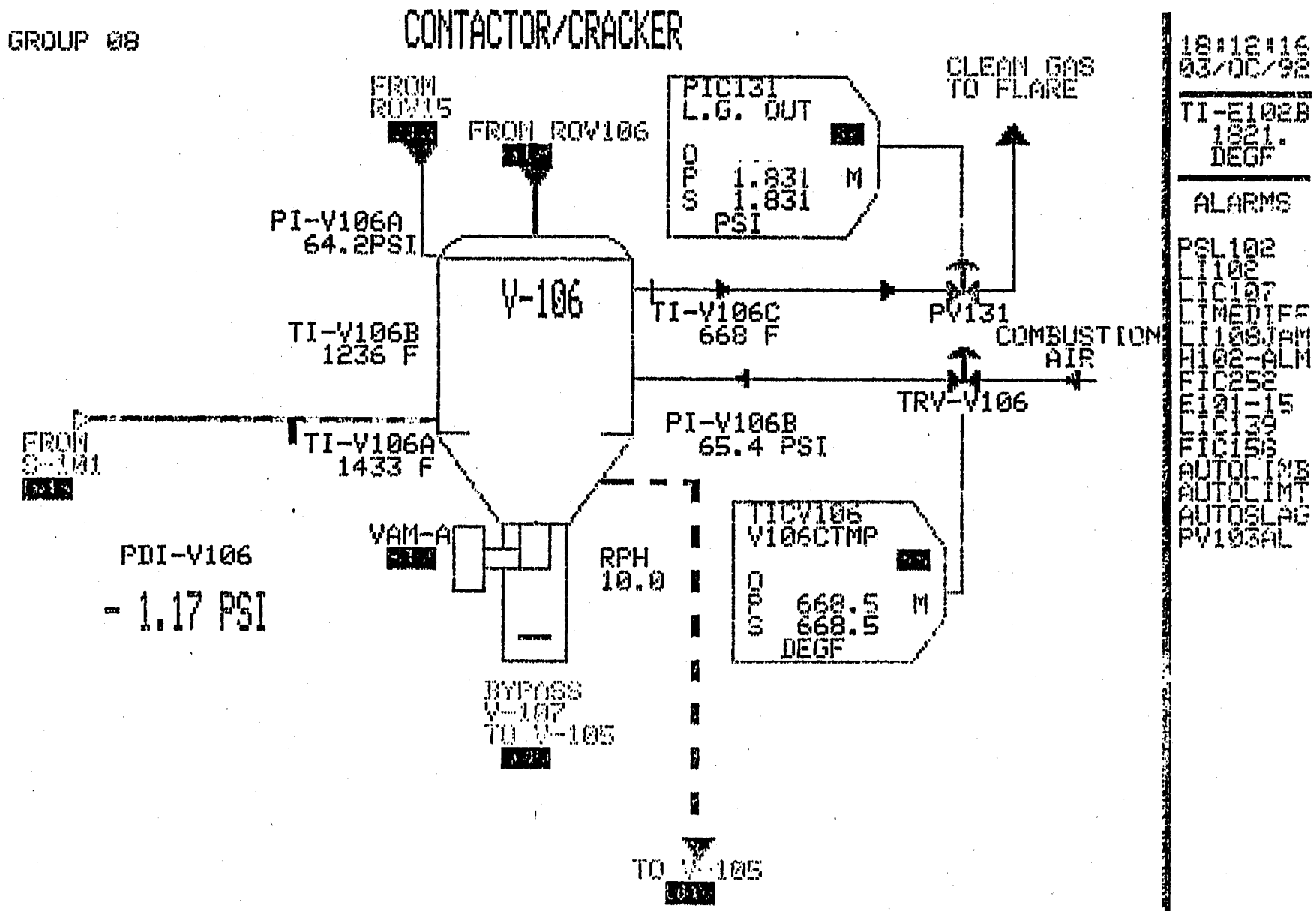
GROUP 08
CONTACTOR/CRACKER
FROM ROV15
FROM ROV106
PIC131
L.G. OUT
O
P 1.831 M
S 1.831
PSI
CLEAN GAS TO FLARE
PI-V106A
64.2PSI
V-106
TI-V106C
668 F
PV131
TI-V106B
1236 F
COMBUSTION AIR
TRV-V106
FROM S-101
TI-V106A
1433 F
PI-V106B
65.4 PSI
VAM-A
PDI-V106
- 1.17 PSI
RPH
10.0
TICV106
V106CTMP
O
P 668.5 M
S 668.5
DEGF
BYPASS V-107 TO V-105
TO V-105
18:12:16
03/DC/92
TI-E102B
1821.
DEGF
ALARMS
PSL102
LI102
LIC107
LIMEDIFF
LI108JAM
A102-ALM
FIC252
E101-15
LIC139
FIC156
AUTOLIMS
AUTOLIMT
AUTOSLAG
PV103AL

SCREEN #4

(TI-V106A), that of the in-coming fuel gas. The temperature of the auger shaft is 1236°F (TI-V106B0). The bed temperature at the combustion zone, where a small amount of combustion air is added, is 1821°F (TI-E102B) -- shown at the top right hand corner below the time and date. This temperature is maintained between 1800°F and 1900°F to facilitate the desulfurization of the fuel gas and the cracking of the hydrocarbons, tars, ammonia, and cyanic acid, HCN. The pressure drop over the bed is low, 1.17 psi (PDI-V106), due to the rapid removal of char particulates collected from the fuel gas by pebbles flowing through the Contactor.

48 Hour Test Results. Samples of the cleaned, mixed rich and lean product fuel gas were taken from the gas stream leaving the Contactor. These samples were analyzed by a laboratory gas chromatograph located at the Calderon PDU site. A typical clean, dry gas analysis is shown on page 4-17. The gas sample was obtained on 3 October 1992 and analyzed the same day at 18:16. The fuel gas contains CO, H2, CH4, and hydrocarbon combustibles diluted by N2 from the air flow to the Gasifier and by CO2, in part from the calcination of the limestone pebbles in the Contactor. None the less, the heating value of the gas, calculated from its composition, was 177 BTU/cuft.

A sample of lean gas from the Gasifier, unmixed with rich gas from the Pyrolyzer, was also taken on 3 October 1992 at 13:51. This sample was obtained by venting the rich gas to the flare through a valve (PV 103), (PYROLYZER AND H-101 BURNER, Screen #5, top right, page 4-18). The lean gas was analyzed at 13:57 (see page 4-19). As might be expected, this lean fuel gas had a lesser CH4, H2, and hydrocarbon content than the mixed fuel gas. Its calculated heating value was 114.5 BTU/cuft. This value still compares favorably with the values of 80 to 100 BTU/cuft for blast furnace gas, commonly used in the furnaces and power turbines of steel mills.

* RUN # 52 OCT 3, 1992 18:16:15 MIXED - CLEAN 10-5-92

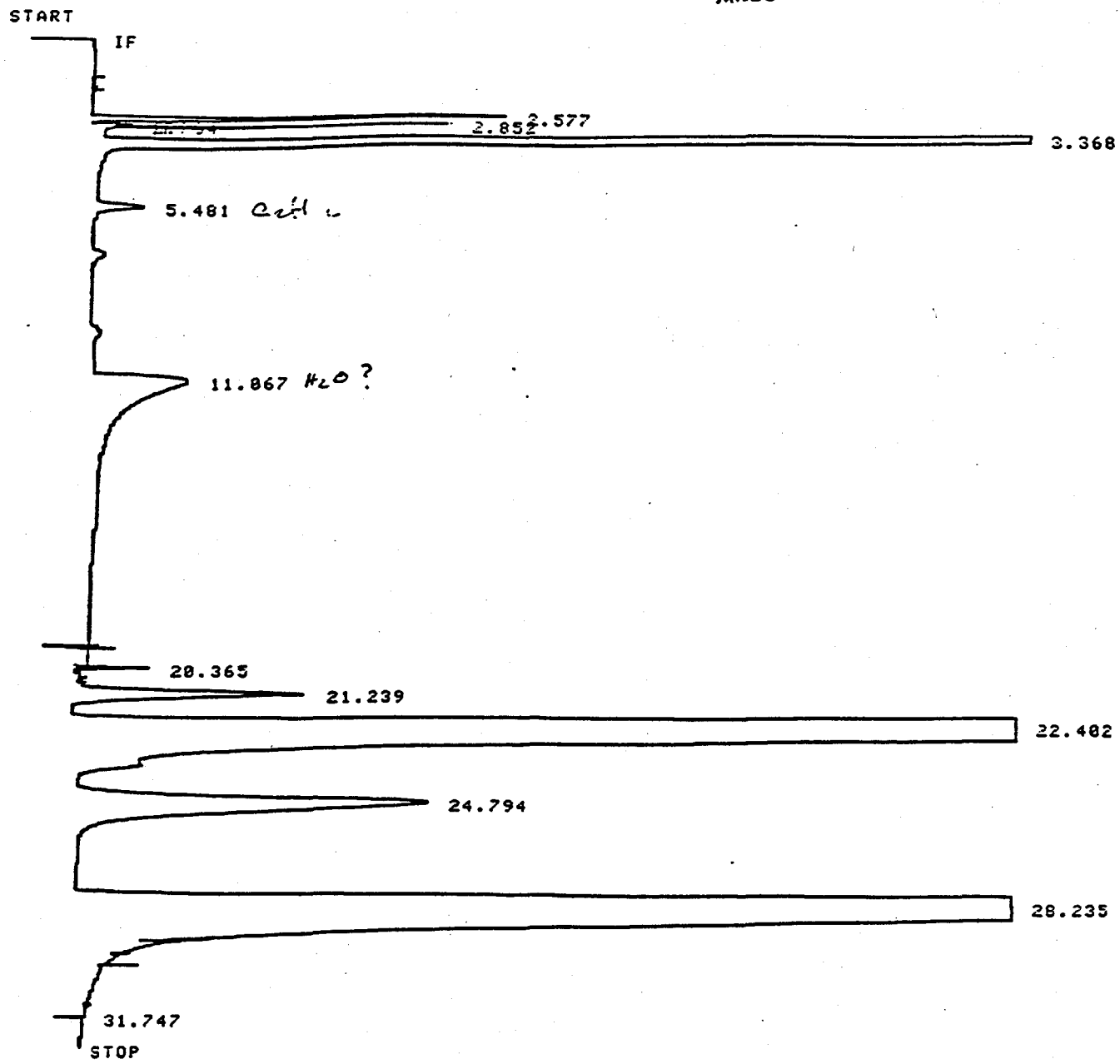

RUN# 52 OCT 3, 1992 18:16:15

ESTD-AREA

RT	AREA	TYPE	CAL#		AMOUNT %		BTU/Cu FT
2.577	2460	N BP	1	H2	10.730	X 355	38.09
3.368	69488	PV	2	CO2	12.170		
5.481	611	I PB	3	C2H2	1.710	X 1499	25.63
21.239	3623	BP	7	O2	.618		
22.402	266128	PV	8	N2	54.304		
24.794	12417	VV	9	CH4	4.828	X 1013	48.91
28.235	93291	I PB	10	CO	19.912	X 322	64.11
			TOTAL		104.27%		176.74

TOTAL AREA= 449469

1UL FACTOR=1.0000E+00

GROUP 03

PYROLYZER AND H101 BURNER

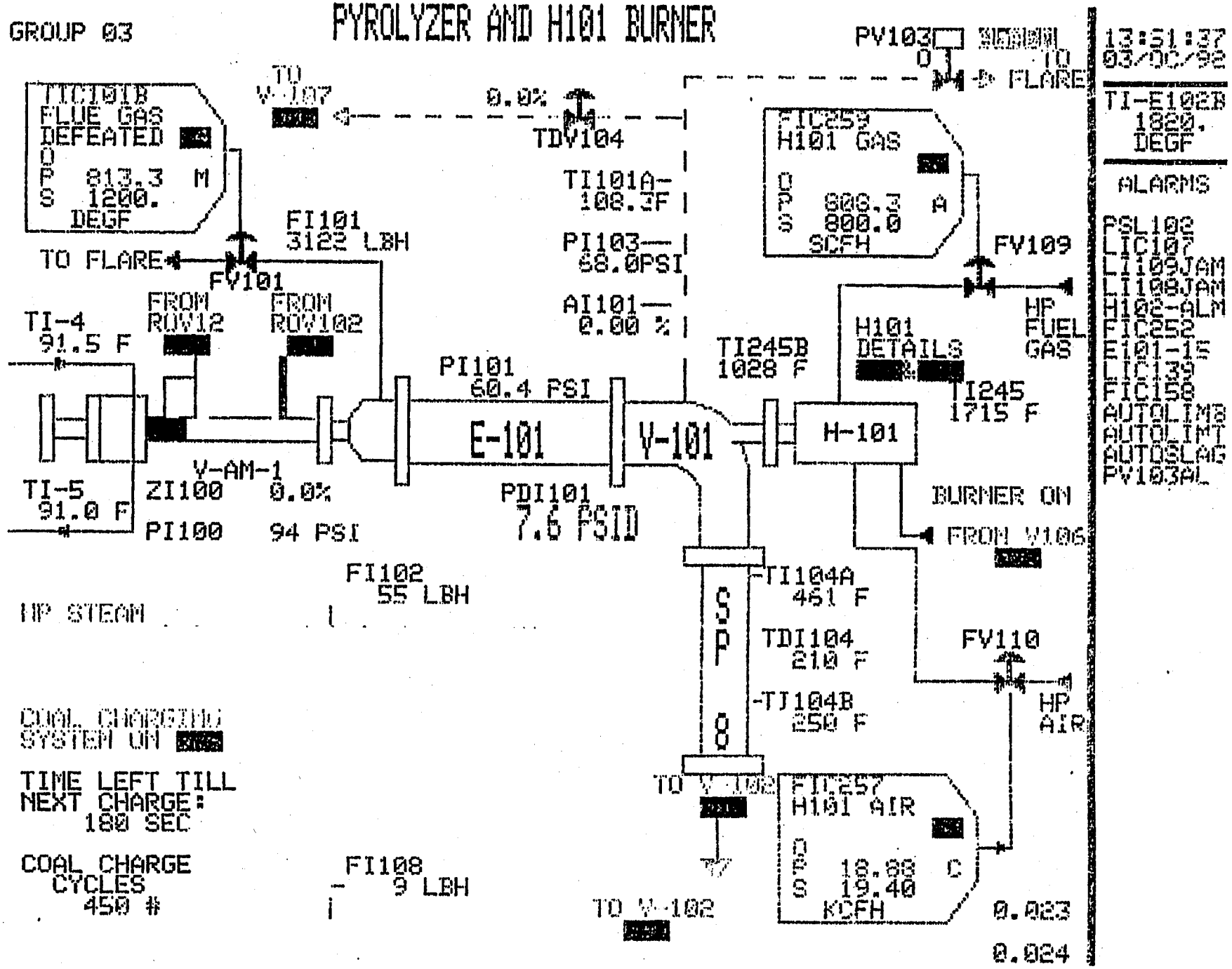

SCRT #5

* RUN # 48 OCT 3, 1992 13:57:09

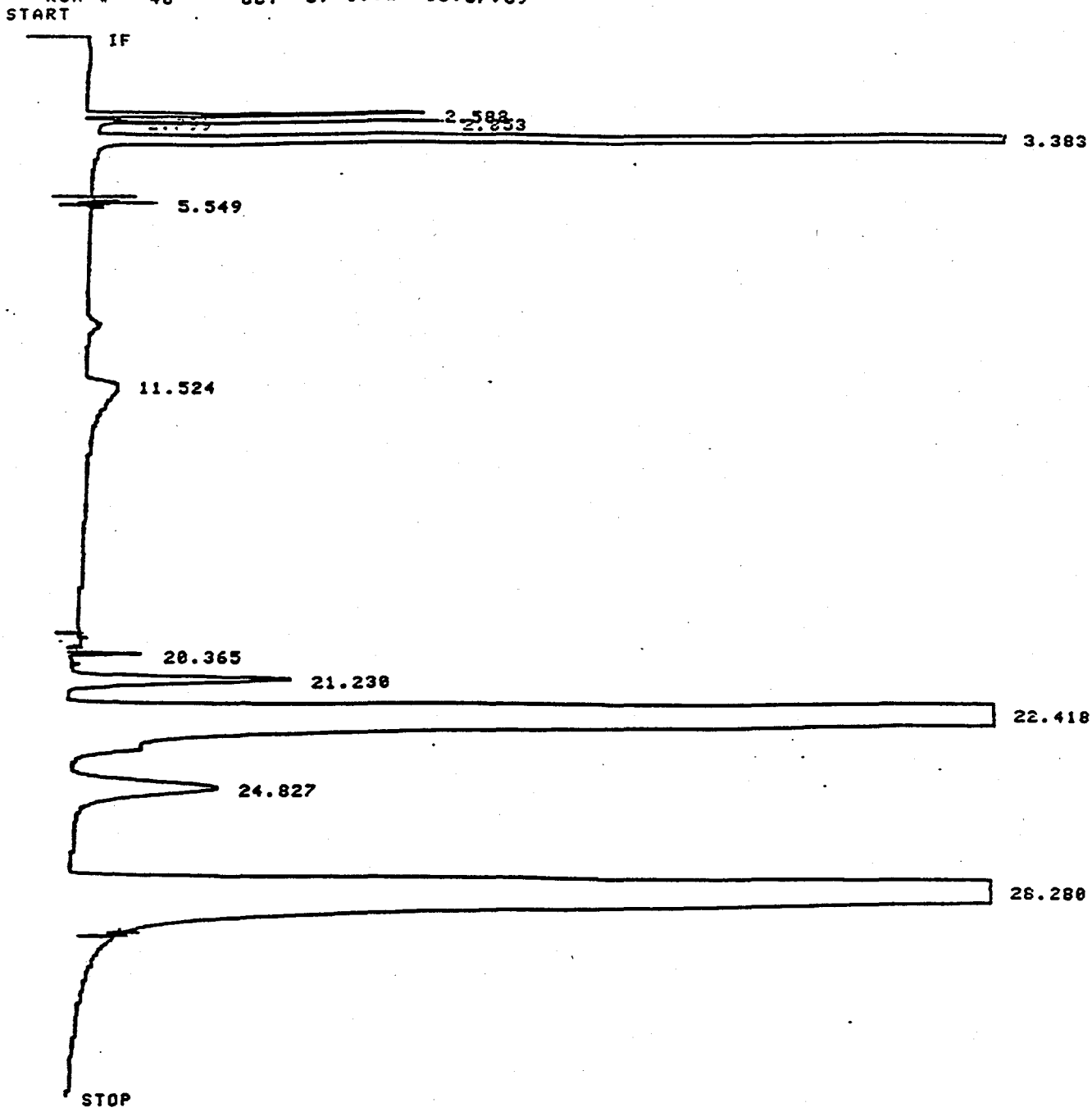

RUN# 48 OCT 3, 1992 13:57:09

ESTD-AREA

RT	AREA	TYPE	CAL#		AMOUNT %	
2.588	2052	N PP	1	H_2	8.217	X 355 = 29.2
3.383	73341	PB	2	CO_2	12.871	
5.549	24	PB	3	??	(2.471) ??	
21.230	3970	VP	7	O_2	.678	
22.418	284963	PV	8	N_2	58.156	
24.827	5058	PV	9	CH_4	2.101	X1013 = 21.3
26.280	93493	PV	10	CO	19.886	X322 = 64.0
					~~104.38~~ 101.909	114.5

TOTAL AREA= 463911

MUL FACTOR=1.0000E+00

The effectiveness of sulfur, H2S, removal during the 48 hour test was evaluated by a set of six consecutive tests performed with commercial sampling ampules designed to detect trace quantities of H2S. These tests evaluated the degree of desulfurization of the mixed fuel gas in the Contactor with in situ calcination of dolomitic limestone pebbles. They were performed on 2 October 1992. The results obtained are shown in the following table.

Table 4-1

SULFUR REMOVAL IN THE CONTACTOR

Time	H2S in Raw Gas in %	H2S in Clean Gas in PPM	Removal in %
01:35	0.40	350	91.25
02:28	0.40	400	90.00
03:42	0.35	250	92.86
05:20	0.35	200	94.30
06:30	0.35	190	94.60
07:58	0.40	175	95.60
		Average	93.10

48 Hour Test Conclusion. The completed 48-hour test at the PDU included the integration of the coal Pyrolyzer, char Gasifier and Hot Gas Clean Up system operating at about 70 psig. Regeneration of the sorbent was not part of the test. Because of approaching winter and because the PDU structure is open to the elements, the operation of the Regenerator on the spent lime sorbent produced in the 48 hour test was postponed for six months. All the lines of the PDU were drained and the plant was laid up at the end of October 1992. The pebbles, however, were left in the hot gas cleanup vessel in order to find out if, on shut down, the sorbent would lose integrity and turn to powder as is ordinarily experienced with lime left in bunkers. By the end of March 1993, the PDU was reactivated in preparation for the operation of the Regenerator.

4.4 Regenerator Test.

Test Preparations. Samples of the pebbles were taken from the Contactor (V-106) to check for degradation. These spent sorbent lime pebbles, impregnated with carbon from hydrocarbon cracking, were sent to Standard Laboratories in Cresson, PA, for analysis. The pebbles did not crumble or apparently degrade during the six months storage in the Contactor while the PDU was inactive. A possible reason for their integrity was carbon deposited on and in them. The pebble analysis from the laboratory, shown on page 4-22, shows a 7.89% carbon content, either as elemental C or as carbonate, CO3. The lime, CaO, content was 31.41%; the moisture, H2O, 6.86%. Most of the remaining content of the pebbles was, presumably, MgO. The total sulfur content of the spent sorbent pebbles was quite low due to the high pebble flow rates through the Contactor. About half this sulfur was in the form of sulfate, SO4. The Hardgrove grindability index was 49.

Test Proper. The processing of the spent sorbent pebbles took place during the week of 19 April 1993. The Contactor of the PDU was operated as a Regenerator; it is equipped with a feeder to control pebble flow, and it is directly connected to the flare for off gas disposal. The air flow to the Regenerator/Contactor passed through the tuyeres and the Gasifier. The auxiliary burner of the Gasifier was operated to preheat the air flow through mixing with high temperature combustion products.

PYROLYZER, Screen #6, page 4-23, illustrates the operating pressure trace for the PDU over a part of the regeneration run. The pressure throughout the run did not deviate significantly from the chosen value, approximately 180 psig.

GOULD ENERGY DIVISION
P. O. BOX 214
CRESSON, PA 16630

STANDARD LABORATORIES, I

DATE: 4-13-93
SAMPLE NO.

CALDERON ENERGY COMPANY
1248 S. MAHONING AVE.
ALLIANCE, OH 44601

SAMPLE ID: SAMPLE NO. 033193-01 LIME PEBBLES

OPERATING CO.:
SAMPLED BY: CUSTOMER PROVIDED
MINE:
LOCATION:

DATE SAMPLED:
WEATHER:
GROSS WEIGHT:

DATE RECEIVED: 04/05/93

OTHER ID: P. O. NUMBER PDU-764 (PRE-REGENERATION)

CERTIFICATE OF ANALYSIS

	ASTM METHOD	AS RECEIVED	DRY BASIS
MOISTURE	D2961 D3302 D3173	6.86%	XXX
SULFUR	D3177 METHOD A	.62%	.67%
CARBON	D3178	7.89%	8.47%
HARDGROVE GRINDABILITY INDEX	D409	49	
SULFATE SULFUR		.28%	.30%

PARTIAL
ASH MINERAL COMPOSITION
D2795 D3682

CALCIUM OXIDE	31.41 %

MAY 03 1993

APPROVED BY

APPROVED BY

PAGE 1 OF 1
123

FOR YOUR PROTECTION THIS DOCUMENT HAS BEEN PRINTED ON CONTROLLED PAPER STOCK. NOT VALID IF ALTERED.

BLACK SEAL ANALYSIS

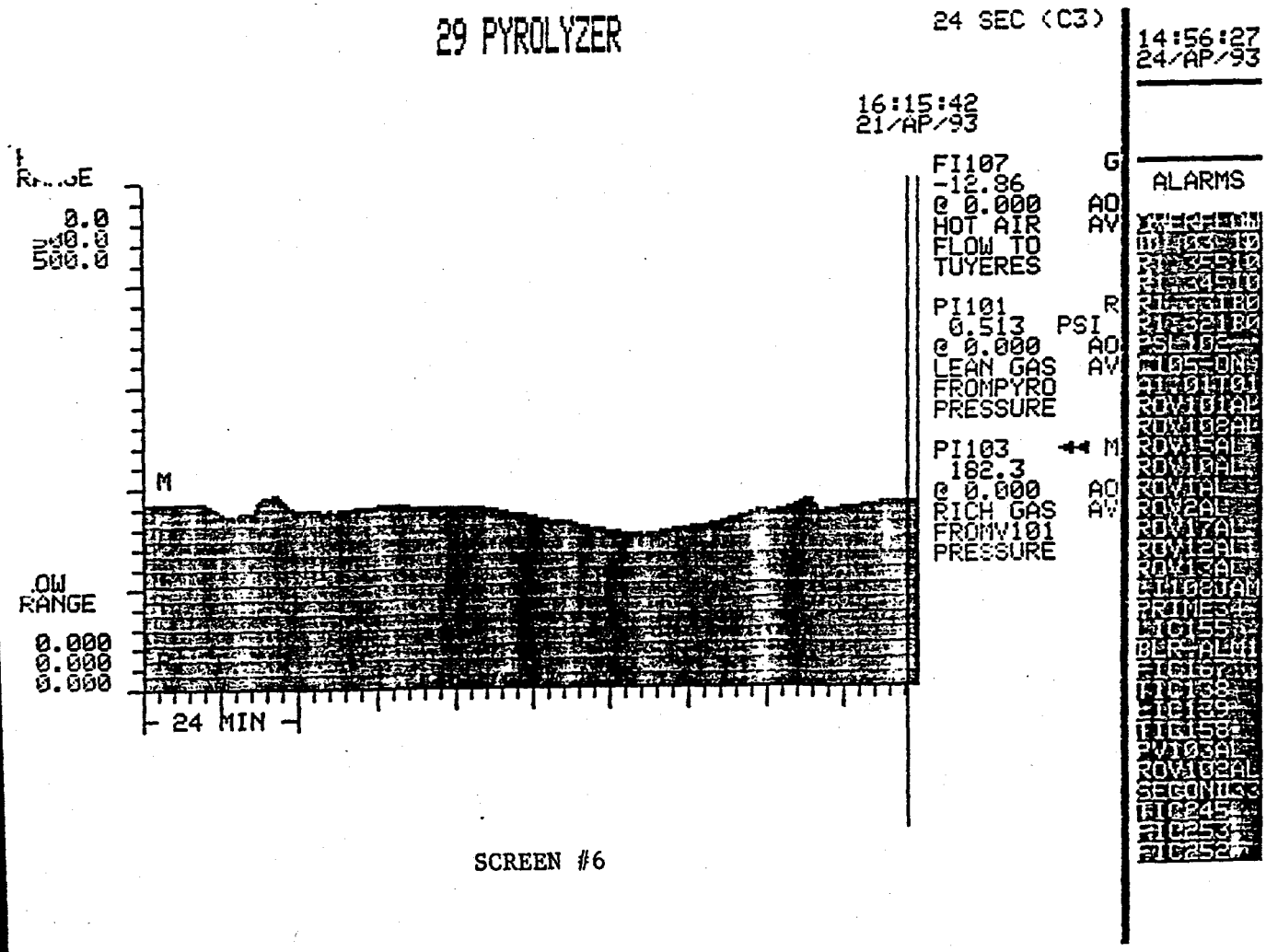
29 PYROLYZER
24 SEC (C3)
14:56:27
24/AP/93
16:15:42
21/AP/93
0.0
500.0
M
24 MIN
0.000
0.000
0.000
FI107 G
-12.86
@ 0.000 AO
HOT AIR AV
FLOW TO
TUYERES
PI101 R
0.513 PSI
@ 0.000 AO
LEAN GAS AV
FROMPYRO
PRESSURE
PI103 M
182.3
@ 0.000 AO
RICH GAS AV
FROMV101
PRESSURE
ALARMS

SCREEN #6

REGENERATOR (LABELED CONTACTOR/CRACKER), Screen #7, page 4-25, illustrates operating conditions in the Regenerator on 21 April 1993 at 16:16. The regeneration temperature was 1717°F at the flame front (TI-V106D); and the system pressure, 182.7 psig (PI-103). This operating temperature is significantly below the value of about 2100°F, required to release sulfur from the sorbent. It appears that the quantity of carbon as C, rather than CO3 in CaCO3, in the spent sorbent was insufficient to achieve this temperature.

Test Results. A large sample, 1337 lbs, of regenerated sorbent was collected and screened to check for sorbent loss due to pebble size degradation in the regeneration process; the sample contained 3.7% in fines minus 1/4 in. It is expected that this loss will be less in the integrated operation of the Calderon process because of the close proximity of the equipment for sorbent regeneration and utilization.

The regenerated sorbent pebble analysis from the laboratory is shown on page 4-26. The carbon content, as both C and CO3, dropped from 7.89% to 5.19%; the CaO content increased from 31.41% to 40.24%. These numbers indicate that the carbon loss is primarily in the form of CO2 from additional calcination of CaCO3 during the regeneration process. The total sulfur content of the regenerated pebbles, as expected, did not drop; all of the sulfur present in the pebbles including that as CaS was, however, converted to sulfate, CaSO4. The Hardgrove grindability index of the pebbles increased to 83 from 49.

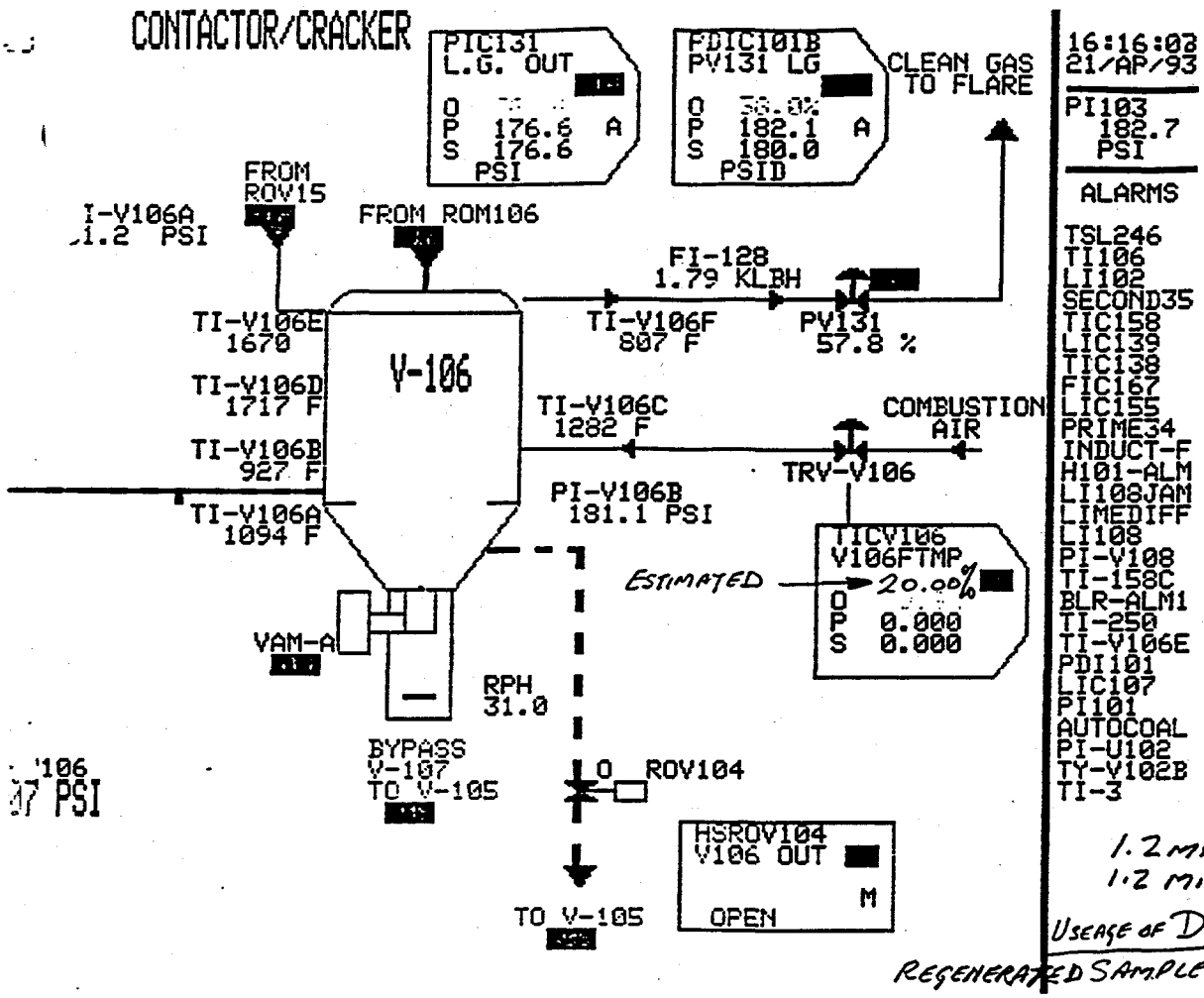
CONTACTOR/CRACKER
PIC131
L.G. OUT
O
P 176.6 A
S 176.6
PSI
FDIC101B
PV131 LG
O 58.0%
P 182.1 A
S 180.0
PSID
CLEAN GAS
TO FLARE
16:16:03
21/AP/93
PI103
182.7
PSI
ALARMS
TSL246
TI106
LI102
SECOND35
TIC158
LIC139
TIC138
FIC167
LIC155
PRIME34
INDUCT-F
H101-ALM
LI108JAM
LIMEDIFF
LI108
PI-V108
TI-158C
BLR-ALM1
TI-250
TI-V106E
PDI101
LIC107
PI101
AUTOCOAL
PI-U102
TY-V102B
TI-3
FROM
ROV15
I-V106A
1.2 PSI
FROM ROM106
FI-128
1.79 KLBH
TI-V106E
1670
TI-V106F
807 F
PV131
57.8 %
V-106
TI-V106D
1717 F
TI-V106C
1282 F
COMBUSTION
AIR
TI-V106B
927 F
TRV-V106
PI-V106B
181.1 PSI
TI-V106A
1094 F
TICV106
V106FTMP
ESTIMATED
20.00%
O
P 0.000
S 0.000
VAM-A
RPH
31.0
BYPASS
V-107
TO V-105
O ROV104
HSROV104
V106 OUT
M
OPEN
TO V-105
1.2 MINS ON
1.2 MINS OFF
USEAGE OF DOLOMITIC LIMESTONE
REGENERATED SAMPLE TEST GROSS WT. 1337 lbs
SCREENED SAMPLE 1288 "
SCREENINGS (FINES) 49 "
CONSUMPTION 3.67%

SCREEN #7

GOULD ENERGY DIVISION
P. O. BOX 214
CRESSON, PA 16630

STANDARD LABORATORIES, INC.

DATE: 5- 4-93
SAMPLE NO. 20

CALDERON ENERGY COMPANY
1248 S. MAHONING AVE.
ALLIANCE, OH 44601

SAMPLE ID: REGENERATED LIME PEBBLES SAMPLE NO. 042493-01

OPERATING CO.:
SAMPLED BY: CUSTOMER PROVIDED
MINE:
LOCATION:

DATE SAMPLED: 4/26/93
DATE RECEIVED: 4/28/93
WEATHER:
GROSS WEIGHT:

OTHER ID: P. O. NUMBER PDU-764

CERTIFICATE OF ANALYSIS

	ASTM METHOD	AS RECEIVED	DRY BASIS
MOISTURE	D2961 D3302 D3173	.09%	XXX
SULFUR	D3177 METHOD A	.64%	.64%
CARBON	D3178	5.19%	5.19%
HARDGROVE GRINDABILITY INDEX	D409	83	
SULFATE SULFUR		.61%	.61%

CALCIUM OXIDE 40.24 %

APPROVED BY

APPROVED BY

PAGE 1 OF 1

BLACK SEAL ANALYSIS

FOR YOUR PROTECTION THIS DOCUMENT HAS BEEN PRINTED ON CONTROLLED PAPER STOCK. NOT VALID IF ALTERED.

Section 5

TECHNICAL ANALYSES OF PDU TEST RESULTS: MATERIAL AND ENERGY BALANCES

Data obtained during two continuous runs of the Calderon PDU have been analyzed: the first, a coal gasification run on 1-3 October 1992; and the second, a sorbent regeneration run on 21-23 April 1993. Material and energy balances have been carried out to characterize the performance of the PDU in both these modes of operation. The coal flow to the PDU during the gasification run was 507 lb/hr; the flow of limestone sorbent to the gas cleaning train was 750 lb/hr. In the sorbent regeneration run, the flow of spent sorbent was 700 lb/hr. The proximate analysis of the coal feed and the analyses of the fresh, spent, and regenerated sorbent and of the fuel gas products are been given in Section 4. The pressure, temperature, and flow data available for process calculations are also presented in Section 4 on screens from the computerized process control and data acquisition system of the PDU.

The description of the process calculations together with conclusions, and recommendations are included in this section.

5.1 Results: Coal Gasification.

Pyrolyzer. Material and energy balances for this section of the PDU cannot be checked due to the lack of data on the temperature, composition, and flow of the coke and rich gas products from the Pyrolyzer. Balances were carried out, however, to estimate the inlet char solids and coal volatiles flow conditions to the Gasifier.

Calculations were performed on the natural gas fired burner to estimate the inlet temperature and the quantity of heat transferred to the coal in the Pyrolyzer. The Pyrolyzer burner was operated under oxidizing conditions, at approximately 150% excess air, in order to maintain the

combustion products and the Pyrolyzer wall temperatures within the desired limits. The calculated burner exit temperature was 1815 F; the measured value, 1710 F. This temperature difference creates an uncertainty of about 11% in the calculation of heat transferred to the coal given the measured outlet temperature of the burner gases from the Pyrolyzer, 814 F.

The heat transferred from the burner combustion products to the coal in the Pyrolyzer tube, calculated from the measured gas temperatures, was 765 BTU/lb of coal. According to the temperature-heat graph, Figure 5-1, (constructed for an Ohio, Harrison, Lower Freeport coal (1) and for the combustion product gases which heat it) this heat quantity is sufficient to raise the average coke temperature leaving the Pyrolyzer tube to an average value of 1476 F. And according to a temperature-volatile quantity correlation (1), Figure 5-2, the remaining volatile quantity remaining in the coke was 1.5% of the original DAF coal. (An additional heat input of 150 BTU/lb of coal would be required to remove the remaining volatiles and to raise the average coke temperature to 1600 F.)

A preliminary analysis of the heat transfer and coking processes in the coal/coke cylinder passing through the Pyrolyzer has been completed. This analysis makes possible design and operations optimization calculations for a Calderon Pyrolyzer. The analysis provides tube wall temperatures which can be compared with three values measured along the length of the Pyrolyzer. The analysis deals with the transfer of heat by convection and radiation from the burner gases to the tube wall and with the conduction of heat within the coal passing through the tube.

The convection heat transfer coefficient from the burner gases directly to the Pyrolyzer tube was estimated from correlations (3) to be 9.4 BTU/hrft^2F. If radiation from the enclosure of the Pyrolyzer tube is also considered, the overall coefficient from the burner gases to the tube wall was 17.6 BTU/hrft^2F.

Figure 5-1. T-Q Diagram for Calderon Pyrolyzer Temperature from Heat Input to Coal

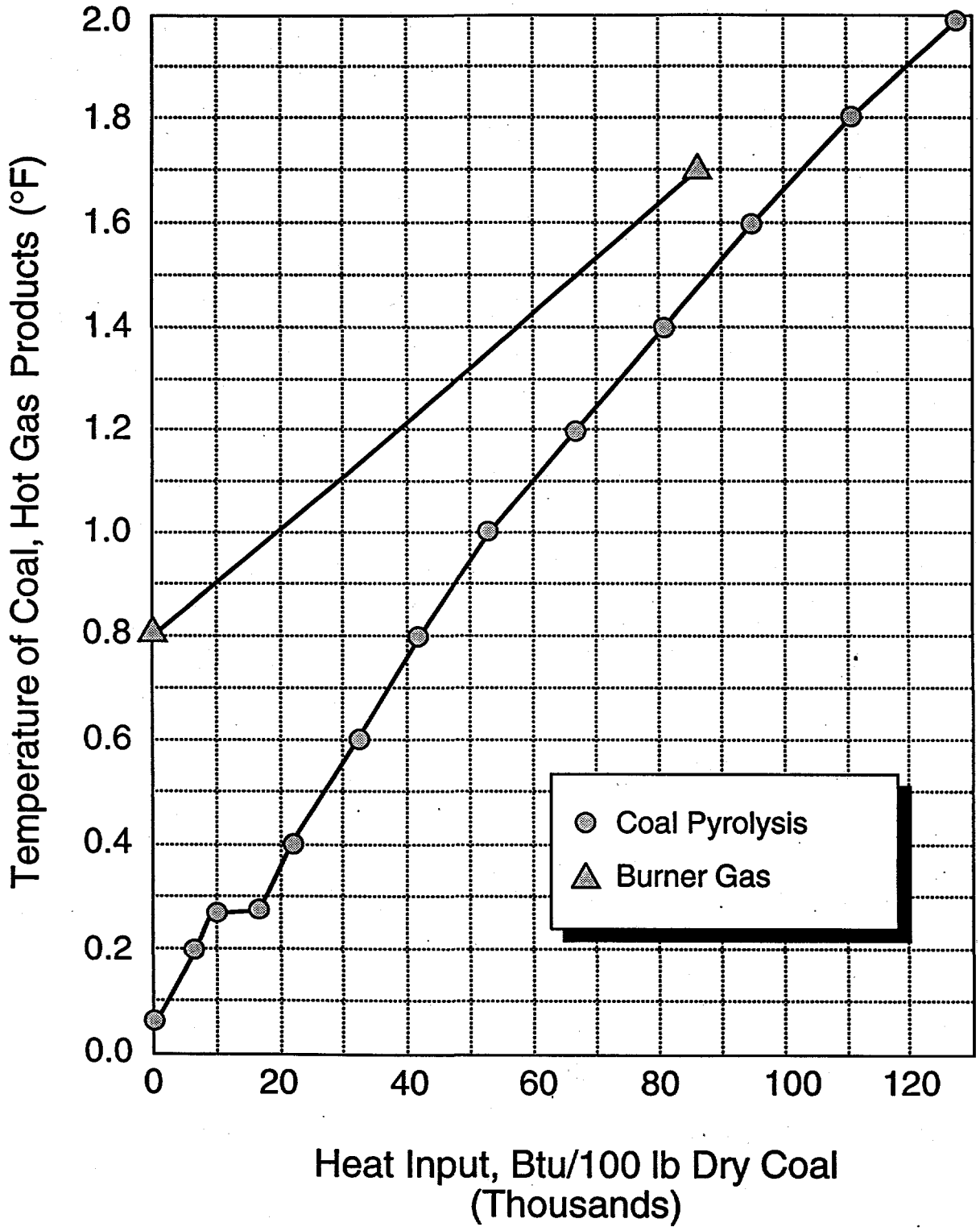

M96000417W

Figure 5-2. Temperature/Volatiles Dependence
Ohio, Harrison, L Freeport Pyrolysis

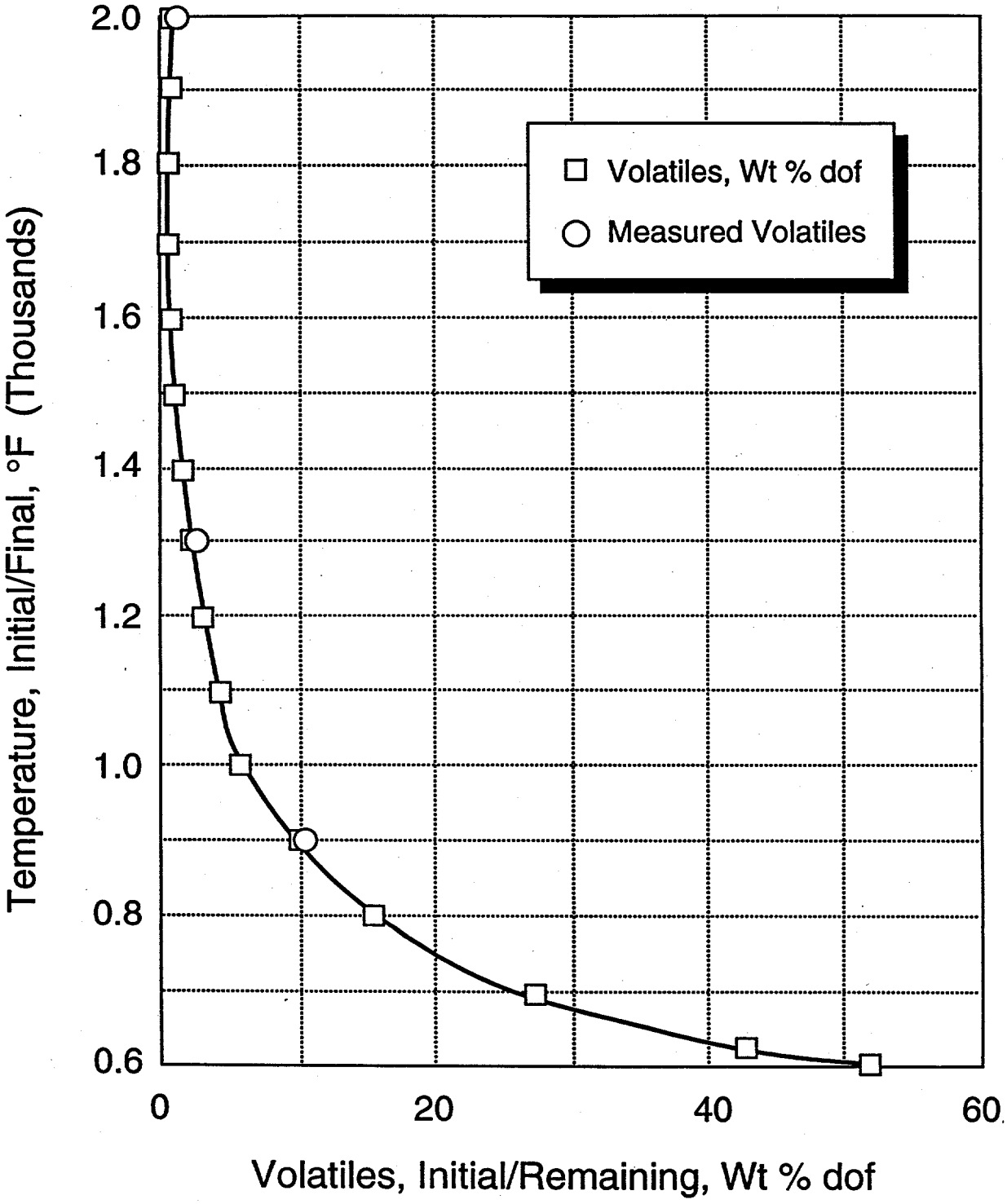

M96000418W

Reported values of the thermal conductivity of coal are in the range of 0.13 BTU/hrftF (2); but the value varies widely. Because of the high porosity of coal and of coal particulate compacts, the conductivity has been shown to depend markedly on that of the gaseous atmosphere. (The thermal conductivity of H2 is 7 times that of air; of H2O, about 2 times that of air.) The thermal conductivity also depends on the form of the coal, which varies significantly as pyrolysis proceeds. In order to achieve reasonable agreement among predicted and measured temperature and heat exchange data, a thermal conductivity of 1.2 BTU/hrft^2F was used in the analysis along with the estimated overall heat transfer coefficient of 17.6 BTU/hrft^2F from the gas to the Pyrolyzer tube.

The measured and predicted temperatures of the gas, wall, and coal/coke in the Pyrolyzer resulting from the analysis are shown in Figure 5-3. This simplified analysis, which ignores the effects of the pyrolysis gas formation and flow through the coal mass, none the less shows fair agreement between measured and calculated temperatures. It also indicates that the core of the coal cylinder is not fully coked even though sufficient heat is provided for complete coking -- if it were uniformly distributed.

Gasifier. Material and energy balances for the operation of the Calderon moving bed, slagging Gasifier cannot be verified. Not all the required inlet and outlet flow measurements -- temperatures, compositions, and flow rates -- are available. But assumptions can be made which enable calculations to assess the effectiveness of the Gasifier performance. It can be assumed that:

Figure 5-3. Calderon Coal Pyrolyzer Temperatures
Ohio, Harrison, L Freeport Pyrolysis

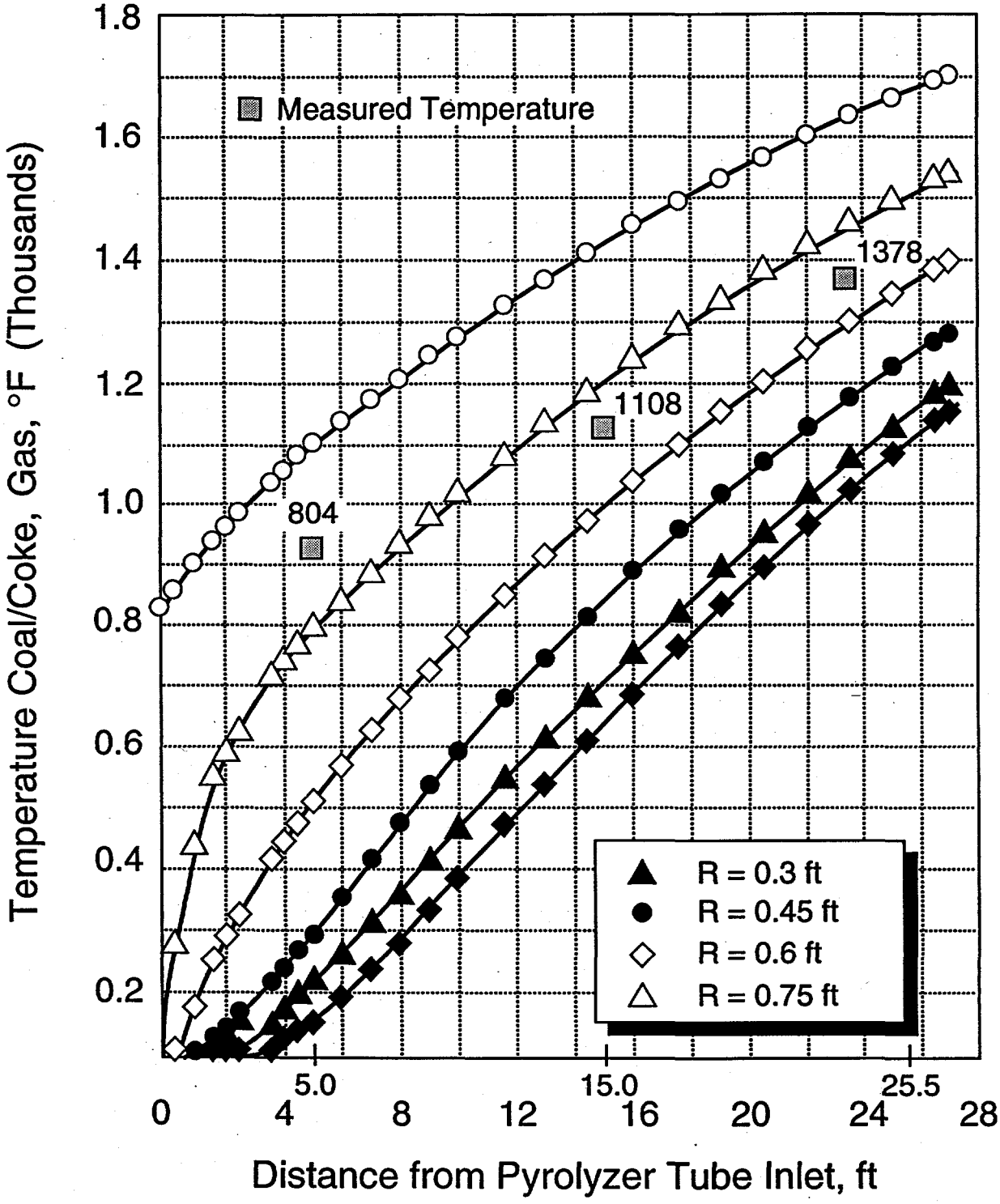

M96000419W

- the char feed from the Pyrolyzer to the Gasifier is the fixed carbon, the ash, and sulfur of the coal feed equal to half the pyritic sulfur and a fraction of the organic sulfur equal to that of the fixed to the total carbon of the coal.
- the temperature, composition, and flow rate of the char to the Gasifier and of the rich gas mixed with the lean gas leaving the Gasifier is that which can be estimated from Pyrolyzer material and energy balances and from assumed coal analyses.
- the carbon, sulfur, and heat removed in the molten slag flowing from the Gasifier are negligible.
- the heat lost from the Gasifier is negligible.

Temperatures, compositions, and flows at various points in the Gasifier have been calculated based on these assumptions and the measured flows and temperatures of natural gas and air to the Gasifier burner, the tuyeres, and the ports at the top of the Gasifier. The estimated temperatures are plotted in Figure 5-4.

The Gasifier burner operated under reducing conditions with approximately 78% of stoichiometric air. The calculated flame temperature was 3405 F. This calculation cannot be verified; the burner thermocouple was withdrawn in order to prevent its burn out. Air was added to the base of the Gasifier through the tuyeres. Its O2 completed the combustion of the fuel flowing to the burner and burned char producing CO2 and H2O. The calculated temperature of the gas just above the tuyeres in the Gasifier is 4265 F. The CO2 and H2O gasified char, C, producing CO and H2; and the temperature dropped as the gas passed upward through the descending char in the Gasifier.

The flow of carbon in the form of coke to the Gasifier, assumed to be the fixed carbon content of the feed coal, was 248 lb/hr. The oxygen content of the air flow through the tuyeres

Figure 5-4. Calderon Coal Gasifier Temperatures

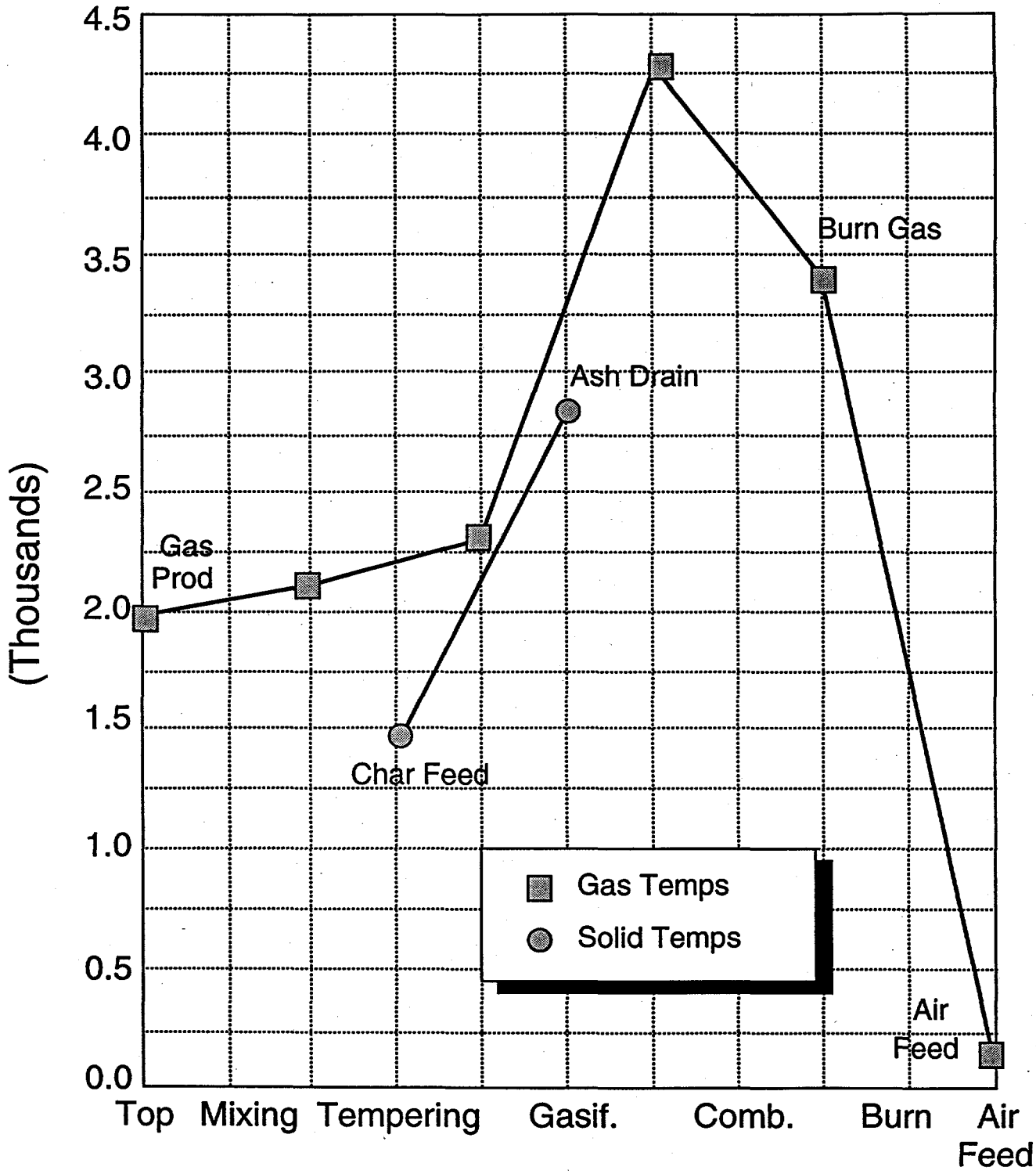

Ohio, Harrison Freeport, Gasification

M96000420W

and burner at the base of the Gasifier and through the ports at the top of the Gasifier (for temperature control) was almost exactly that required to convert all of this carbon to CO. If it is assumed, therefore, that the lean gas leaving the Gasifier coke bed was a mixture of CO, H2 (from the burner fuel), and N2; then the lean gas temperature, calculated from the energy balance, is 2105 F. Mixing and cracking of the rich gas flowing from the Pyrolyzer at 1476 F results in an estimated mixed gas temperature of 1968 F leaving the Gasifier. The measured temperature is 1644 F. The cracking of CH4 and heat loss from the equipment may account for much of this temperature difference.

If a portion of the carbon from the coke leaves the Gasifier as particles and a corresponding portion of the oxygen flow forms CO2 in the exit gas, then a higher exit gas temperature from the Gasifier would result. Direct measurements of exit gas temperature, composition, and/or particulate content from both the Pyrolyzer and the Gasifier bed are needed to characterize the performance of this unit.

Gas Clean Up System. Material and energy balance calculations have been performed to estimate temperatures, compositions, and flows of the various gas and solid streams throughout the gas cleaning bed, the Contactor. The resulting temperatures are presented in Figure 5-5. The flow of CaCO3 sorbent to this bed, 750 lb/hr, significantly reduced the sulfur, H2S, content of the combined rich and lean fuel gases from 0.37% to 260 ppm -- 93% removal. But it also increased significantly the CO2 content of the fuel gases, absorbed large quantities of heat, and reduced the outlet temperature of the product fuel gas from the bed due to the partial calcination of the cold, fresh sorbent to CaCO3.MgO.

Calculations based on the analysis of the sorbent -- obtained about 6 months after the PDU test, indicate that the sorbent may have been only partially calcined. The MgCO3 may have been

Figure 5-5. Calderon Coal Gas Cleanup Contactor Temperature

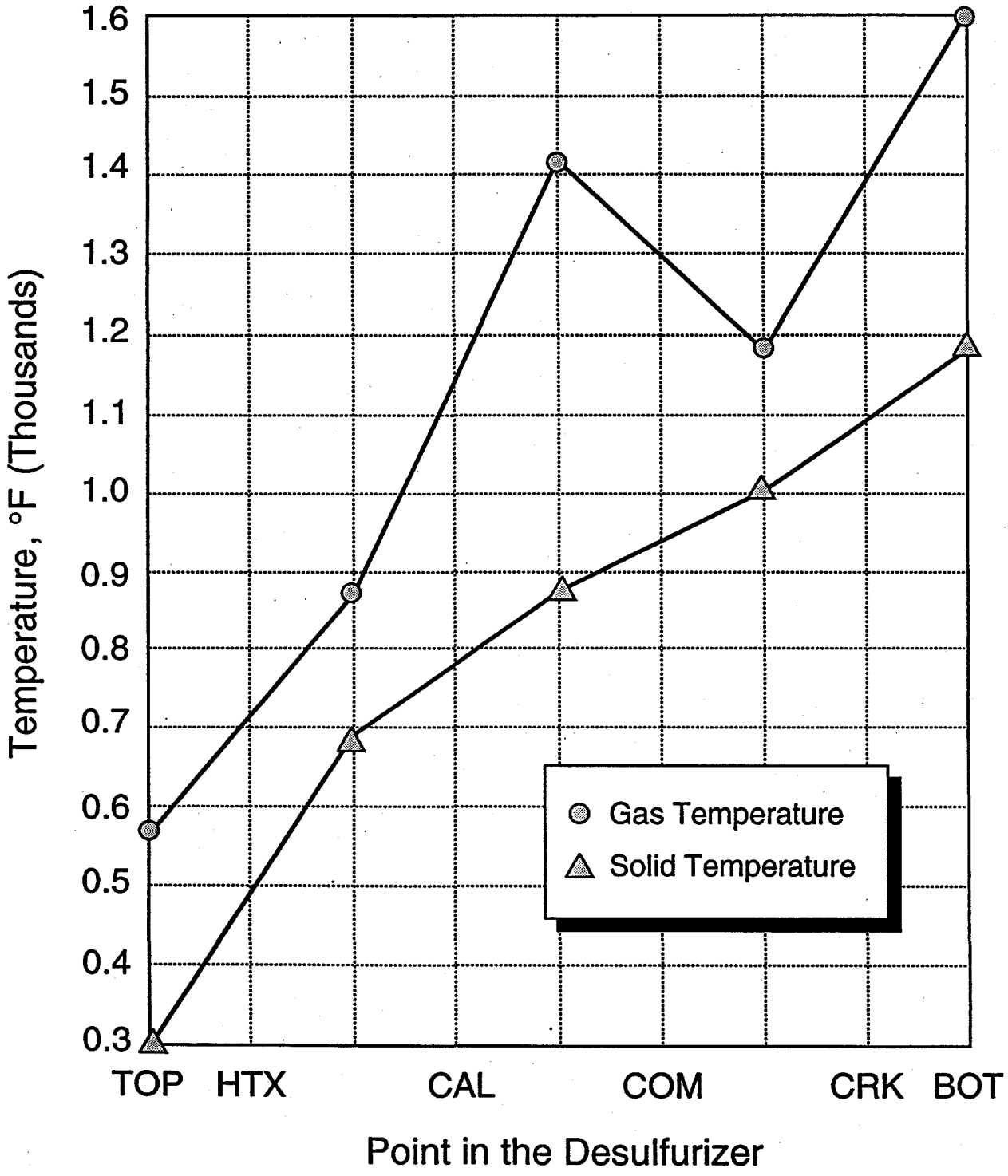

M96000421W

converted to MgO at the temperatures reached in the Contactor; but the temperature and the time may not have been sufficient to convert CaCO3 to CaO. The carbon, C, reported in the analysis may, therefore, have been primarily in the form of carbonate, CO3, associated with the Ca of the spent sorbent. (This possibility is consistent with the observed difficulty in achieving high temperatures in sorbent regeneration, which are dependent on burning the C content of the spent sorbent.) Furthermore, it seems likely that MgO of the sorbent may have been hydrated to Mg(OH)2 during its period of storage. The presence of carbonate and hydroxide in the sorbent would account for the relatively low % of CaO determined by the sorbent analysis. The outlet fuel gas temperature calculated from the energy balance, neglecting heat loss and heat removal from the bed by the auger, is 601 F; the measured temperature, 610 F.

The quantity of CO2 leaving the Contactor bed may well be determined by the equilibrium reaction

$$2CO = C + CO2.$$

The relative quantities of CO and CO2 present in the product fuel gas correspond to an equilibrium temperature of 1370 F; the relative quantities of H2 and CH4 determined by the reaction

$$C + 2\ H2 = CH4$$

to 1090 F. Because of the high activity of the amorphous C formed by the CO-CO2 reaction above and deposited on the sorbent, the CH4 equilibrium temperature is probably in reasonable agreement with that for CO2.

Both the efficiency of the coal gasification process and the overall hot gas heating value of the product fuel gas, measured to be 130 BTU/std ft^3, would be improved by reducing the sorbent flow and by increasing the outlet temperature of the product fuel gas.

Overall Material Balances. Overall material balances for the elements C, H, O, and N2 were carried out based on the input flows of coal, sorbent (assumed to be CaCO3.MgCO3), air, and natural gas (assumed to be CH4) and on the compositions of the output fuel gas stream. The ultimate analysis of the coal was assumed to be that of an Ohio, Harrison, Lower Freeport coal (1); the proximate analysis was provided by the coal supplier. The composition of the output fuel gas stream was taken as the average value determined by the gas chromatographic analyses of samples taken during the operation of the PDU.

Since the total flow of the product fuel gas was not measured, the material balances were based on the assumption that the N2 flow in the product fuel gas is equal to that in the coal and in the measured air flows to the Gasifier burner, tuyeres, and top ports. The quantity of H2O in the fuel gas was estimated from the water gas equilibrium relation at the assumed outlet temperature. The results are summarized in Table 5-1.

Table 5-1

CALDERON COAL PROCESS PDU:
ELEMENTAL MATERIAL AND ENERGY BALANCES.
CONTINUOUS RUN, 1-3 OCTOBER 92, 11:24-14:43

Element	% Loss in Output (Fuel Gas, Sorbent) from Input (Coal, Nat Gas, Air, Sorbent)
C, carbon	17.0
H, hydrogen	1.9
O, oxygen	6.1
S, sulfur	42.1
Energy	26.6

All the elements -- C, H, O, and S -- and energy showed a loss or deficiency based on the assumption of a constant N2 flow. The sizable 42% loss of sulfur, S, may be due to S content in the ash removed from the Gasifier and the cyclone, to S adsorption in the system, to the presence of other sulfur forms other than H2S (thiophenes and COS, for example), and/or to errors in the data. The analysis of the gas leaving the gas cleaning system (an average of 260 ppm H2S in the clean gas) corresponds to an overall removal of 90% of the S content of the coal.

The calculated 6% loss of oxygen, O, may be due to inaccuracies in flow and composition data or to an inaccurate estimate of the H2O content of the fuel gas. The significant 17% loss of carbon, C, is probably due to the carry over of char particulates from the Gasifier, removed in the gas cleaning Contactor (the cyclone dipleg plugged during the run), and the formation of carbon deposits in the system due to hydrocarbon cracking and possibly to the CO shift to CO2. As discussed above, the amount of carbon as elemental C in the spent sorbent analyzed was apparently minimal. It seems likely that carbon fines separated from the sorbent pebbles prior to their analysis. Data on the quantity of such carbon fines and of carbon deposits contained within the system are not available.

Overall Energy Balance. About half -- 51% -- of the energy input to the PDU in the form of coal and natural gas was delivered as output in the heat of combustion and sensible heat of the product fuel gas; sensible heat was 12% of this output. The energy losses in the PDU operation were due primarily to the 17% carbon loss (char fines removed in the cyclone and in the spent sorbent pebbles), to heat absorbed in the calcination and heating of the limestone sorbent (about 16% of the total heat input), to the sensible and latent content of the combustion products leaving the Pyrolyzer (about 6% of the total heat input), and to heat losses from the equipment.

The measurement of char losses from the Gasifier with the spent sorbent from the Contactor is needed to quantify their carbon and energy content. The energy losses can be significantly reduced by reducing the C losses (primarily through the recycling of fines from an operating cyclone); by reducing, regenerating, and recycling the sorbent flow; and by recovering heat from the combustion products leaving the jacket of the Pyrolyzer and from the product fuel gas.

5.2 Results: Sorbent Regeneration.

Overall material and energy balances for the regeneration run have been calculated. Figure 5-6 shows the estimated temperatures at various locations throughout the system during regeneration based on measured inlet temperatures and flows. Calculated flow compositions and rates for the gas and sorbent solids streams are contained in the spread sheet for the process.

Gasifier. In the regeneration run the Gasifier served as a producer of hot gas, air partially depleted in O2. The burner at the base of the Gasifier was operated with excess fuel to moderate its temperature. Excess air was added to the burner product through the tuyeres and through the top ports of the Gasifier to provide excess O2 for burning carbon, C, in the regenerator. The measured exit flow from the regenerator indicated that about half of the hot gas produced in the Gasifier leaked from the system before reaching the regenerator, presumably through the cyclone dipleg.

Regenerator (Contactor). A maximum operating temperature of 2100 F in the regenerator was desired in order to release the sulfur captured by the sorbent and to prevent the formation of CaSO4. Apparently there was too little carbon as elemental C in the spent sorbent to achieve this high temperature by its burning in the Regenerator; the maximum temperature measured there was 1717 F. And consequently the total S content of the sorbent was essentially constant. There

Figure 5-6. Calderon Regenerator Temperatures
Ohio, Harrison, L Freeport Coal

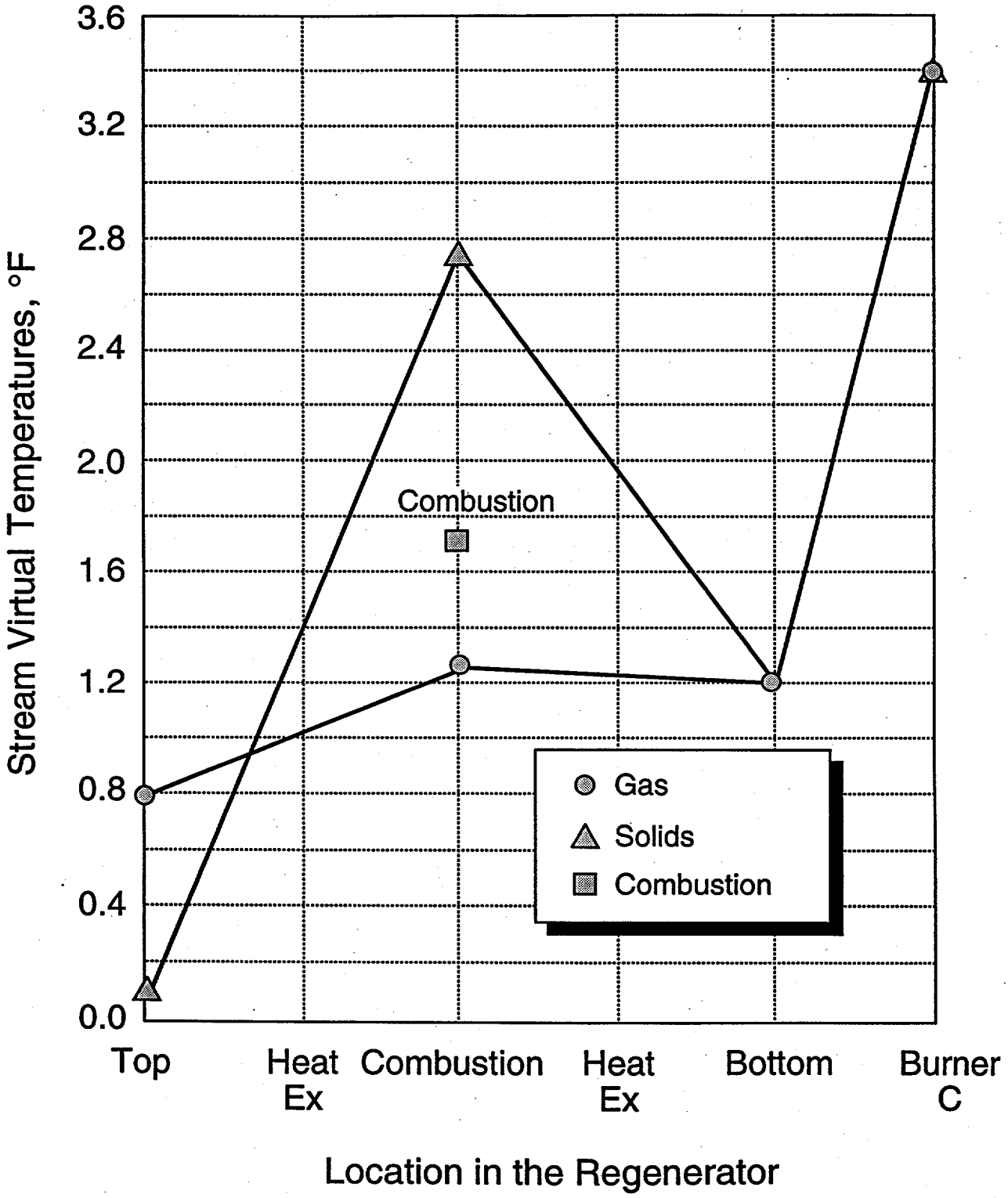

M96000422W

may have been, however, some conversion of sulfide, CaS, to CaSO4. Calculations indicate that only a quarter of the measured C content of the sorbent feed was carbon; the bulk was carbonate, CO3. It appears likely also that all of the C reported in the regenerated sorbent was that contained in CaCO3.

The regenerator energy balance calculations also indicate that a disproportionate share of the heat of C combustion is generated and retained within the solid sorbent. This observation is consistent with a combustion mechanism involving the burning of C contained within pebbles by O2 diffusing in from the surrounding air. More precise regenerator design calculations would involve a representation of this mechanism to be used along with more complete information on the C forms and content in the spent sorbent.

Overall mass and energy balances for the regeneration run cannot be checked because of the lack of an analysis of the exit gas from the regenerator.

5.3 Conclusions

Overall elemental material and total energy balances with reasonable degrees of closure have been calculated for the initial continuous gasification run of the Calderon coal process PDU. The data provided by the basic instrumentation of the plant are adequate both for operation and for performance analysis in coal gasification and sorbent regeneration. Additional instrumentation and analyses are required in the future, however, to obtain data and information for operations optimization and plant design.

The heating value and the low level of H2S in the product gas were acceptable for a gas turbine fuel. Further work is required to show reduced C losses, increased recovery of the energy input in the heating value of the fuel, and decreased sorbent flows. Demonstration of sorbent regeneration and recovery of elemental S in a continuous process operation awaits the production

of spent sorbent with both a significant S content as sulfide, CaS, and also adequate carbon as elemental C to achieve the desired regeneration temperature and to reduce the sulfur released from the CaS as SO2 to elemental S.

In addition to the operational problems of slag removal from the Gasifier and of fines removal from the Cyclone dipleg encountered in PDU gasification run, the material and energy balance calculations bring out several additional important considerations:

- the temperature gradient in the coal/coke passing through the Pyrolyzer. The core of the material may not be coked until the outer layers are raised significantly above the temperature required to remove the volatiles. The optimal design and operation of the Pyrolyzer requires careful consideration of the application -- rich gas, fuel gas, and/or coke production; the materials proposed for the Pyrolyzer and its enclosing shell -- their temperature tolerance; and the requirements for energy efficiency and heat recovery. Careful heat transfer calculations, including modeling of the pyrolyzer, are required for scale up and optimization.
- the effectiveness of the Gasifier. The lack of data on the exit gas temperature and its composition and on the char particulate carry over from the bed of the Gasifier prevents an accurate assessment of its performance. The problem is complicated by the addition of air or steam, for exit gas temperature control, and by the mixing of rich gas with the lean gas over the bed of the Gasifier. It is difficult to separate and to assess the individual effects of gasification, gas mixing, combustion, tar and methane cracking,[1] and carbon carry over and deposition on the measured output from the Gasifier.
- the flow rate of fresh limestone sorbent to the Contactor. The flow established in the 48 hour test achieved a high degree of H2S reduction in the product fuel gas, but it severely reduced the CaS and the carbon, C, content of the spent sorbent. It also consumed heat

and reduced operating temperatures and residence time in the Contactor. As a result, the sorbent was probably only half calcined, forming CaCO3.MgO. The effectiveness of the Contactor was compromised; and proper operation of the subsequent regeneration run was not possible. In future runs of the PDU, the flow of the sorbent should be reduced by a factor of 10-20 so that the degree of Ca sulfidation attained in the sorbent is 30% or greater and so that the C content is adequate to raise the sorbent temperature to 2100°F.

5.4 Recommendations for Future PDU Runs.

The operation of the Calderon coal process PDU should be extended to develop and demonstrate the technology for its possible near term applications. These now appear to be:

- an environmentally benign process for the production of metallurgical coke along with a medium BTU fuel gas. There is now a shortage of coke making capacity for steel production in the U. S. Conventional coke plants are failing to meet environmental restrictions on volatile hydrocarbon and particulate emissions. The Calderon Pyrolyzer and Hot Gas Cleaning Contactor and Regenerator along with a closed Dry Quench unit, replacing the Gasifier, provide the basic equipment for an effective, clean coke plant.
- a hot gas cleaning process for integrated gasification combined cycle -- IGCC -- coal fired, power generation plants. Such plants are now being constructed in the U. S. as part of the Clean Coal Program. At least four of these plants plan the installation of equipment for the hot gas cleaning of coal derived fuel gases. The Calderon Contactor and Regenerator may well be provide the basis of an effective, low cost, low waste system for sulfur, H2S, and particulate removal from the fuel gases of IGCC plants.

U. S. Governmental and commercial interest in plants for combined production of power and liquid fuels from coal apparently will be delayed until the next century or the next oil crisis.

Extended runs in the Calderon coal process PDU should be planned and carried out in which the equipment configuration and the coal flow, sorbent flow, and plant operating conditions -- pressure and temperatures -- are systematically selected to determine an optimal process and plant design. The plant configuration and operating conditions selected for the runs should take into account the application intended -- rich gas, fuel gas, and/or coke production with appropriate product gas cleaning and sorbent regeneration provisions. Specifically, the Pyrolyzer should be adapted to coke production; and the Gasifier, temporarily replaced by a closed Dry Quench unit.

Additional measurements should be accommodated and made in the operation of the Pyrolyzer, Cyclone, Contactor/Cracker, Regenerator, and Dry Quench units in order to characterize their performance more fully and to obtain the data required for scale up of the plant. For the Pyrolyzer, measure the temperature and composition of the rich gas product. For the Cyclone, measure the quantity, size distribution, and composition -- carbon content -- of the collected fines. For the Contactor/Cracker, measure the entering raw gas composition including CH4, hydrocarbons, NH_3, and the various sulfur compounds -- H2S, COS, and thiophenes; measure also the particulate and NH_3 content of the clean product gas; measure the composition of the spent sorbent -- the C, CaCO3, CaS, CaSO4, CaO, and ash contents of the fines and of the coarse pebbles. For the Dry Quench, measure the temperatures and flows of the quench gases and the coke solids.

For checking the data obtained in future runs of the Calderon PDU, the material and energy balance calculations should be extended by performance models of the Pyrolyzer, Gasifier, Contactor, Cracker, Regenerator and S Condenser, and Dry Quench units.

Heat transfer computations should carried out for the Contactor. These might be the simple ones indicated above -- convection and radiation from the burner gas to the Pyrolyzer tube and conduction in the coal/coke. Or more complicated models of the equipment and the coking process might be attempted. Temperature-time comparisons of the continuous coking process in the PDU with the conventional batch coking process might provide additional insight and data for Pyrolyzer design and operation. The Pyrolyzer model would be useful in determining the optimal diameter and length for a design and the optimal gas temperature and flow for operation.

Char gasification rate correlations should be combined with detailed material and energy balance calculations and used to provide a model of the Gasifier. This model would predict the temperature and outlet composition of the lean fuel gas based on the inlet char, air, and steam flow conditions and on the Gasifier design -- diameter and bed height.

5.5 References for Section 5.

1. U. S. Department of Energy, Coal Data Handbook, 1978.
2. Berkowitz, N. An Introduction to Coal Technology, Academic Press, New York, 1979.
3. McAdams, W. H. Heat Transmission, McGraw-Hill, New York, 1954.

Section 6

COMMERCIAL PLANT DESIGN BASIS AND DESCRIPTION

The commercial scale conceptual design described here integrates medium Btu content syngas preparation and its conversion to methanol with low Btu content fuel gas preparation and its conversion to electrical power. The scale selected (i.e. 1,600 tons/day coal feed) is consistent with a minimum scale demonstration of a single gas preparation and cleanup module.

The design is based on a greenfield siting of this integrated facility which includes coal pyrolysis/gasification, hot gas cleanup and sulfur recovery, methanol production and combined cycle power generation, together with the necessary support facilities. The quantities of feeds and products and the overall configuration of the facilities are illustrated in Figure 6-1. Provision is made in the conceptual design to receive feed coal and distribute product methanol and by-product sulfur and slag by truck transport over the interstate highway system.

The proprietary Calderon process, illustrated in Figure 6-2 (for which a patent has been issued and others are pending), combines novel approaches for the production of energy products from coal: pyrolysis, gasification, and integrated regenerative hot gas cleanup. The hot gas cleanup is unique in that it directly yields elemental sulfur.

The feed coal is first pyrolyzed (heated) to yield a crude hydrocarbon-containing rich gas. This gas is then cracked and treated for sulfur removal to yield a syngas (hydrogen and carbon monoxide). The syngas provides feedstock, which is converted to methanol for use as a liquid transportation fuel.

The low-volatile-content char remaining from the pyrolysis is gasified by partial combustion with air to yield a dilute (low Btu) gas. This gas is cleaned for sulfur removal and then used to fuel a gas turbine with steam cycle to produce electric power.

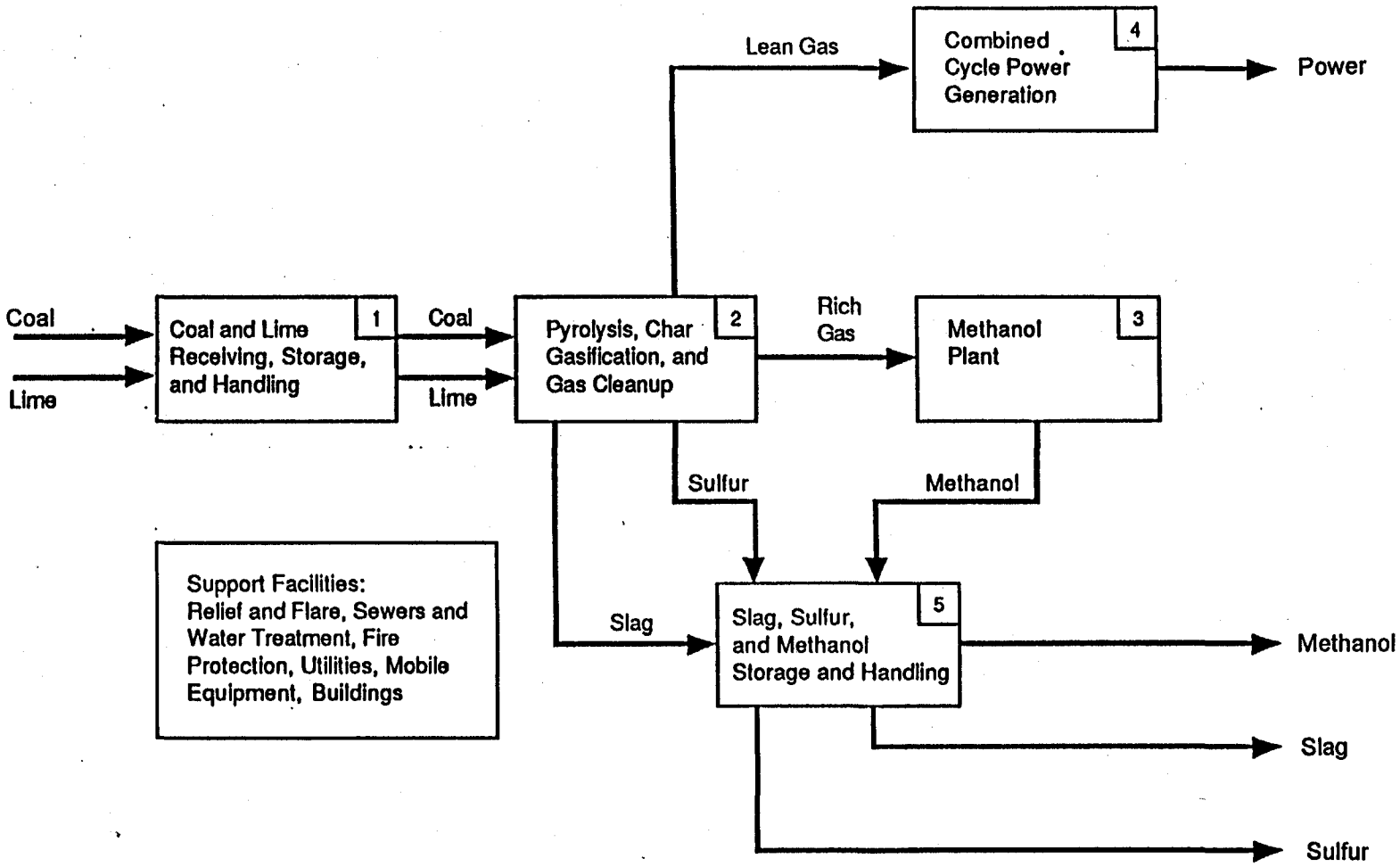

Figure 6-1 **Conceptual Design Block Diagram**

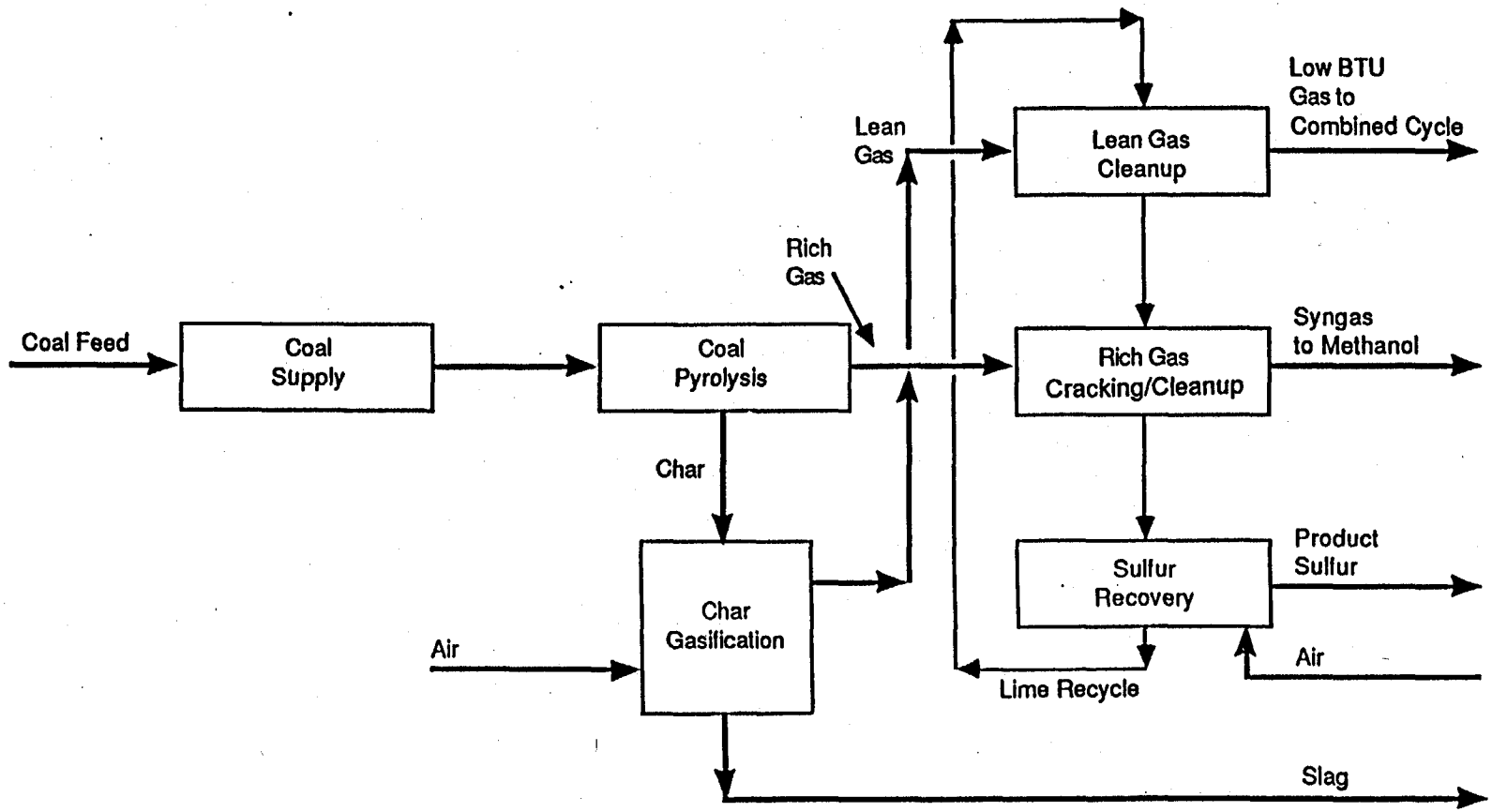

Figure 6-2 **Pyrolysis, Gasification, and Gas Cleanup**

6.1 Process Components

The major components of the Calderon process are illustrated in the configuration shown in Figure 6-2. This process provides a unique and efficient integration of the following:

- Coal Pyrolysis. The coal is heated to drive off its volatiles content (rich gas).
- Char Gasification. The hot char from the pyrolysis is gasified by partial combustion with air to yield a hot, low-Btu-content gas (lean gas). The ash content of the coal is converted to a molten glassy slag. The lean gas produced has minimal CO_2 content as a result of its discharge through hot char, which converts CO_2 to CO.
- Rich Gas Cracking and Desulfurization. The gas is passed through a moving bed of lime, where the hydrocarbons are cracked and sulfur is absorbed by the lime and moisture and CO_2 are converted to CO.
- Lean Gas Desulfurization. The lean gas is passed through a moving bed of lime, which captures the sulfur content of the gas.
- Sulfur Recovery. The lime is regenerated by partial combustion with air, releasing sulfur vapor. The sulfur is condensed and recovered in molten form.
- Slag Removal. Molten slag from the gasifier is quenched in water and settled from the resulting coarse sand-like slurry.

The significant features and potential advantages of the Calderon process for coproduction of methanol and electric power are summarized below.

6.2 Process Features

The Calderon coal gasification/gas cleanup process has a number of unique features that make it highly suitable for the coproduction of electrical power and liquid transport fuel

(methanol). These features are discussed below and contrasted to alternative oxygen-blown gasification processes.

6.2.1 Positive Displacement Coal Feed. The positive displacement (ram) feed can accommodate unprepared (run-of-mine) caking or noncaking coal which is mechanically forced through the horizontal pyrolyzer.

By contrast, entrained and fluidized-bed systems require finely ground coal; moving bed-systems require sized coal and limit acceptable quantities of coal fines; and neither system employs positive force to move the coal through the processing zones.

6.2.2 Horizontal Pyrolysis: Pretreatment of Gasifier Feed. The positive displacement feed of coal into the horizontal pyrolyzer consolidates the coal and coal fines into a porous, fractured, noncaking, nonswelling char suitable for gasification. The horizontal configuration retains the pyrolysis liquids formed in contact with the heated char favoring their cracking to lighter components, which are then removed as vapor (rich gas).

By contrast, fluidized systems may require noncaking coal or pretreatment of the coal to prevent agglomeration within the bed. Moving-bed gasification of coal may require noncaking coal and/or mechanical stirring devices within the bed to prevent coal agglomeration. Moving-bed coal gasifiers normally produce liquid by-products (tars), which are difficult to separate, may require upgrading, and can contain cancer-causing agents.

6.2.3 Air Blown, Moving Bed Char Gasification. The use of air for the gasification of the char eliminates the considerable investment cost and energy requirements for the oxygen supply that has been conventionally employed in pressurized gasifiers. It also

eliminates the need for steam feed to moderate gasifier temperatures. The dilute gas produced (lean gas) is particularly suitable for, or limited to, onsite uses such as the production of electrical power. The air-blown system also integrates well with the proposed hot gas cleanup system and eliminates the need for separate high-temperature heat recovery (high-pressure steam generation). The large char inventory of the moving-bed gasification, together with the use of air, facilitate safe control of the gasifier oxidant feed.

By contrast, the oxygen-blown systems normally require cooling of the hot gases from the gasification. The medium-Btu gas produced is entirely usable either for chemical synthesis or for fuel applications, and its higher heating value makes it suitable for medium-distance offsite use. The entrained-flow systems require precision control of the oxygen/coal ratio to maintain safe gasification conditions.

6.2.4 Integrated Hot Gas Cleanup Sulfur Recovery. The moving-bed hot gas cleanup system separately desulfurizes the lean and rich gases, cracks the hydrocarbon constituents of the rich gas, recovers elemental sulfur, and produces additional lean gas from the regeneration of the lime absorbent.

By contrast, the conventional cold gas cleanup systems (solvent scrubbing) require separate processing for sulfur recovery. Separate recovery and handling of coal liquids (from moving-bed systems) may also be required, together with extensive wastewater treating to accommodate soluble organics. The other hot gas cleanup systems proposed to date for commercial application do not recover the sulfur in elemental form. The cold recovery processes require a separate sulfur conversion process.

6.2.5 Environmental Impacts. The environmental impacts of the process are minimal and readily controlled. The process is a net consumer of water; thus, treatment is needed only for normal blowdowns associated with steam generation. Because the process does not isolate the normal distillation products of coal (tars, phenols, ammonia, etc.), the environmental control of these materials is also not required.

Solids discharged are limited to lime fines bled from the hot gas cleanup system, and the gasifier slag. The quantity of lime waste is small and will be combined with the coal feed for ultimate discharge as a component of the slag. The slag is a fused sand-like material which has been tested for inertness by means of TCLP testing, as specified by EPA.

Atmospheric emissions are limited to dust from coal handling and the SO_2 and NO_x resulting from fuel gas combustion for power generation. Since run-of-mine coal is used, coal processing and associated dust emissions are minimized. The cleanup of the fuel gas prior to combustion is expected to control the sulfur emissions to levels lower than currently mandated by EPA. The use of low-Btu gas in the combustion turbines is expected to facilitate the control of NO_x. The gasification and subsequent gas cracking conditions are such that CO_2 is predominately converted to CO.

By contrast, conventional moving-bed systems produce an aqueous waste containing water-soluble organics requiring extensive biological treatment. Entrained-flow and fluidized bed systems normally produce an ash discharge containing some unconverted carbon and some ash fines. Both of these can impair utility of the ash and its ease of disposal.

6.2.6 Potential Productivity. The rich and lean gases from the Calderon process can be combined and used for production of power only (no methanol production).

However, selective use of the cracked pyrolysis gas for methanol production and the low Btu gas for air-blown char gasification for power generation is preferred. This coproduction provides (per ton of the as-delivered design coal) some 122 gallons of methanol and 1,340 kWh of electrical power.

Section 7

COMMERCIAL APPLICATION: CAPITAL AND OPERATING COST ESTIMATES

7.1 Capital Costs

The capital costs estimates prepared are an order of magnitude, venture guidance precision, reflecting the conceptual nature of the design. The total capital requirements for the project are divided into the following two cost components:

	$MM
Total plant investment	$165
Other capital requirements	15
Total capital requirement	$180

7.1.1. Total Plant Investment. The estimate of total plant investment is based on the conceptual design process, engineering and site information. Estimating methods consistent with the conceptual nature of the design were employed and rely on informal vendor contact as well as extrapolation from Bechtel National, Inc. information.

The estimate reflects no allowance for future escalation. The costs exclude allowance for funds during construction (AFDC), which are developed separately in the economic assessment.

Included in the estimate is a contingency allowance for the uncertainty that exists within the conceptual design quantity pricing for the technology under consideration. The contingency assigned to the gasification portion of design reflects its first-of-a-kind developmental status.

The distribution of the total plant investment between the major process and support facilities is illustrated in Figure 7-1.

7.1.2 Other Capital Requirements. The costs constituting other capital requirements include:

- Allowance for funds during construction
- Prepaid royalties
- Preproduction (or startup) costs
- Other owners costs
- Working capital
- Land

7.2 Operating Costs and Revenues

Operating costs are divided into fixed, variable, and consumable costs. All operating costs are subject to inflation. Fixed operating costs are essentially independent of actual capacity factor, number of hours of operation, or amount or product produced. Variable operating costs consumables and revenues are directly proportional to production rates and period of operation (capacity factor).

The fixed operating costs include operation labor, maintenance costs, and overhead charges against labor. The variable operating costs include coal cost (predominant) plus lime and chemical and catalyst costs. Revenues include income derived primarily from sale of methanol and electric power, with a minor contribution from sale of by-product sulfur and slag. The relative magnitude of these costs and revenues is illustrated in Figure 7-2. The operating revenues are based on assumed market prices of $0.59/gallon for methanol, 40 mils/kWh for power, $80/ton for sulfur, and $4/ton for slag.

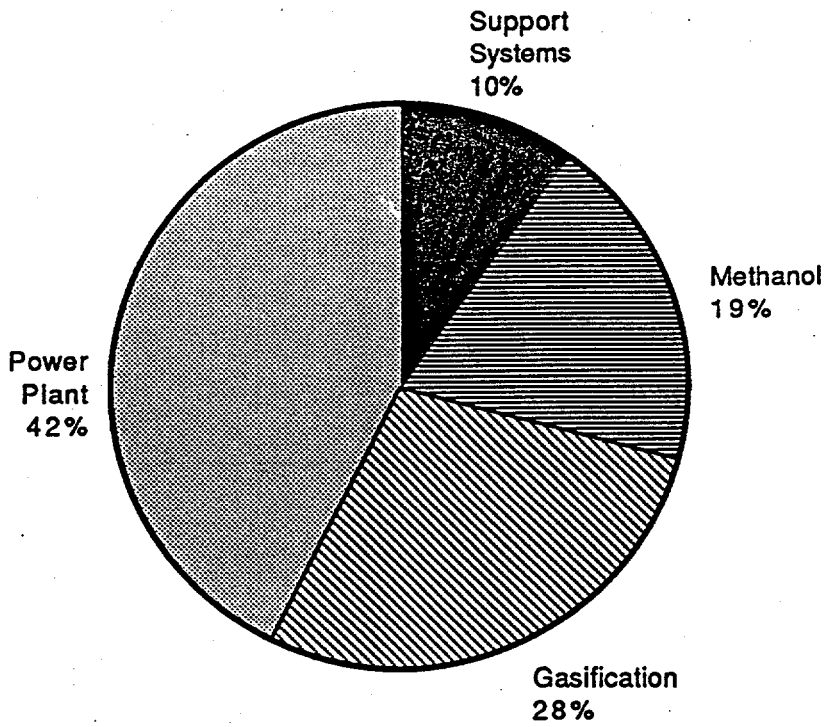

Total = $165 MM

Figure 7-1 **Distribution of Total Plant Investment**

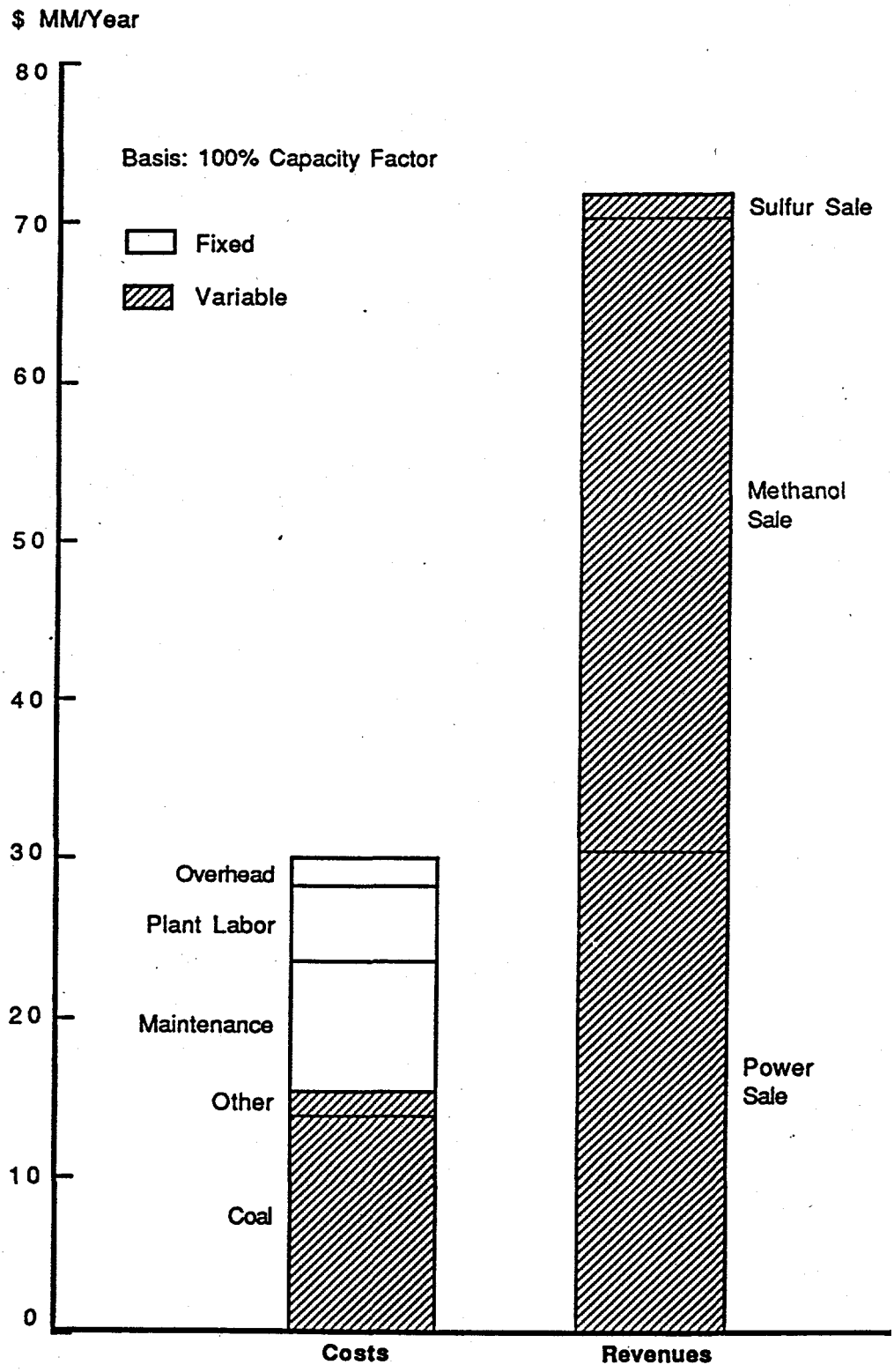

Figure 7-2 **Operating Costs**

Section 8

COMMERCIAL APPLICATION: PROCESS ECONOMICS

In portraying the overall process economics and their sensitivities to operating cost variables, two parameters, i.e. required sales prices for the export of electrical power (mils/kWh) and return on equity (%/yr), are displayed in turn against each of the following variables while holding the remaining variables at their assumed normal values:

- Methanol sales price $0.59 per gallon (base set on increase in demand of methanol for MTBE)
- High sulfur coal purchase price estimated at $1.07 per million Btu HHV ($25/ton)
- Percent of estimated plant investment with a base set by Bechtel National, Inc. of $165MM
- Plant capacity factor at 70 percent of full capacity, based on a Bechtel National, Inc. estimate of 70 percent full capacity for a single train facility

The economic model employed is patterned after the EPRI standard for economic assessment. Based on assumed financial parameters, construction schedule, plant capacity factor, and revenue from sale of methanol, sulfur, and slag, a levelized constant dollar value is projected for the export electrical power. The results of these calculations carried out at four levels of each variable are shown in the following figures in which power cost and return on equity are developed for the following range of the individual variables:

- Methanol sales price ($0.20 per gallon to $0.70 per gallon)
- Coal purchase price ($1.00 to $1.80 per MMBtu HHV)
- Capacity factor (60 to 90 percent)
- Plant investment cost (80 to 140 percent of the base estimate of $165MM)

In all cases, it is assumed that a 30 percent capacity factor is attained the first year of operation, 50 percent the second year, and the base value for all subsequent years.

The financing structure employed, Table 8-1, reflects charges normally applied to proven processes rather than for this facility, a portion of which constitutes a first-of-a-kind installation. The revenue stream employed is based, however, on reduced capacity during the first two years of operation consistent with a first plant installation.

8.1 Economic Sensitivities

The sensitivities of power cost and return on equity with methanol price, coal price, capital cost, and capacity factors are portrayed in Figures 8-1 and 8-2 for the financial parameters summarized in Table 8-1.

For levelized costs for power in the marketable range of 40 to 50 mils and methanol in the range of $0.50 to $0.60 per gallon, the process as defined in this conceptual design shows promising potential. This is illustrated by the acceptable returns on shareholder equity ranging from 15 to 25 percent.

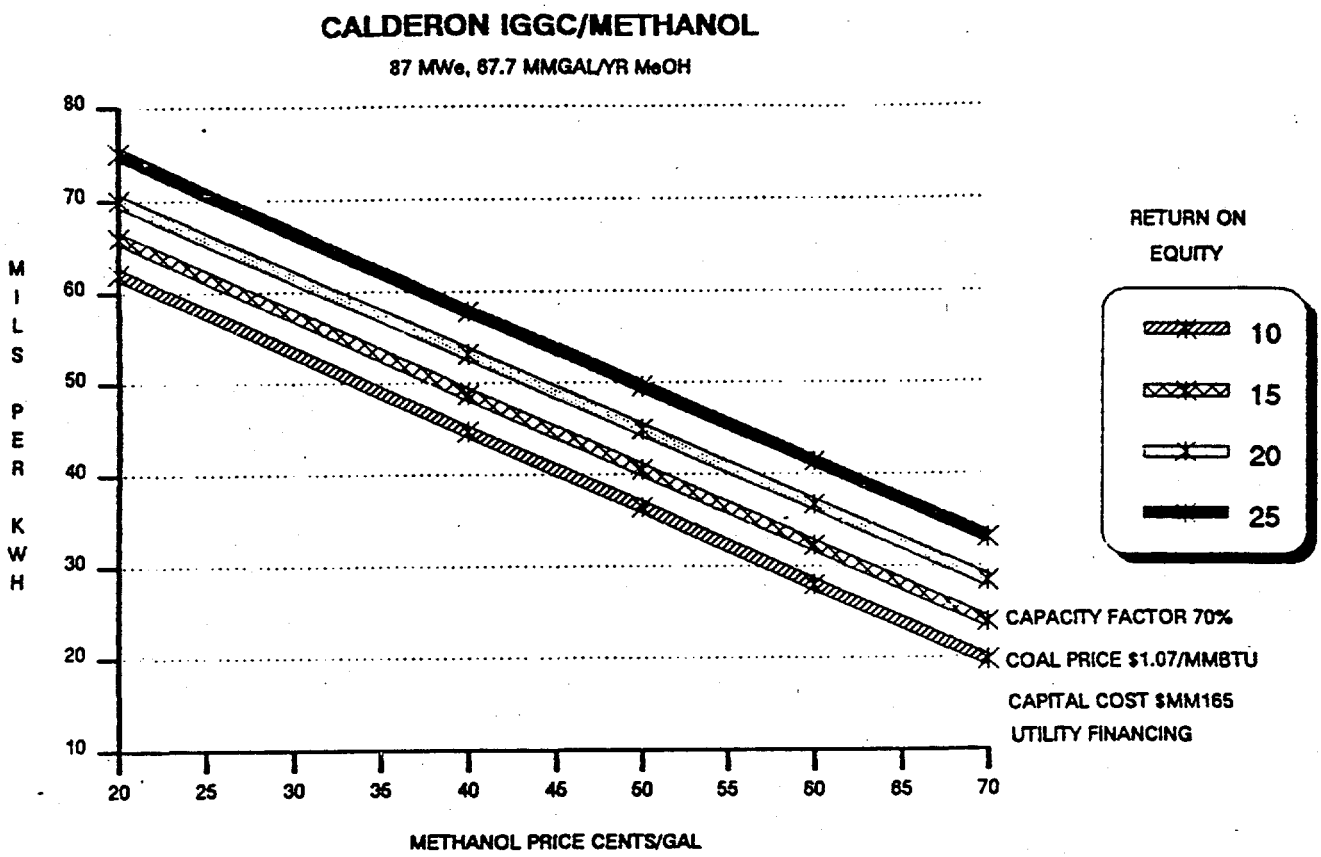

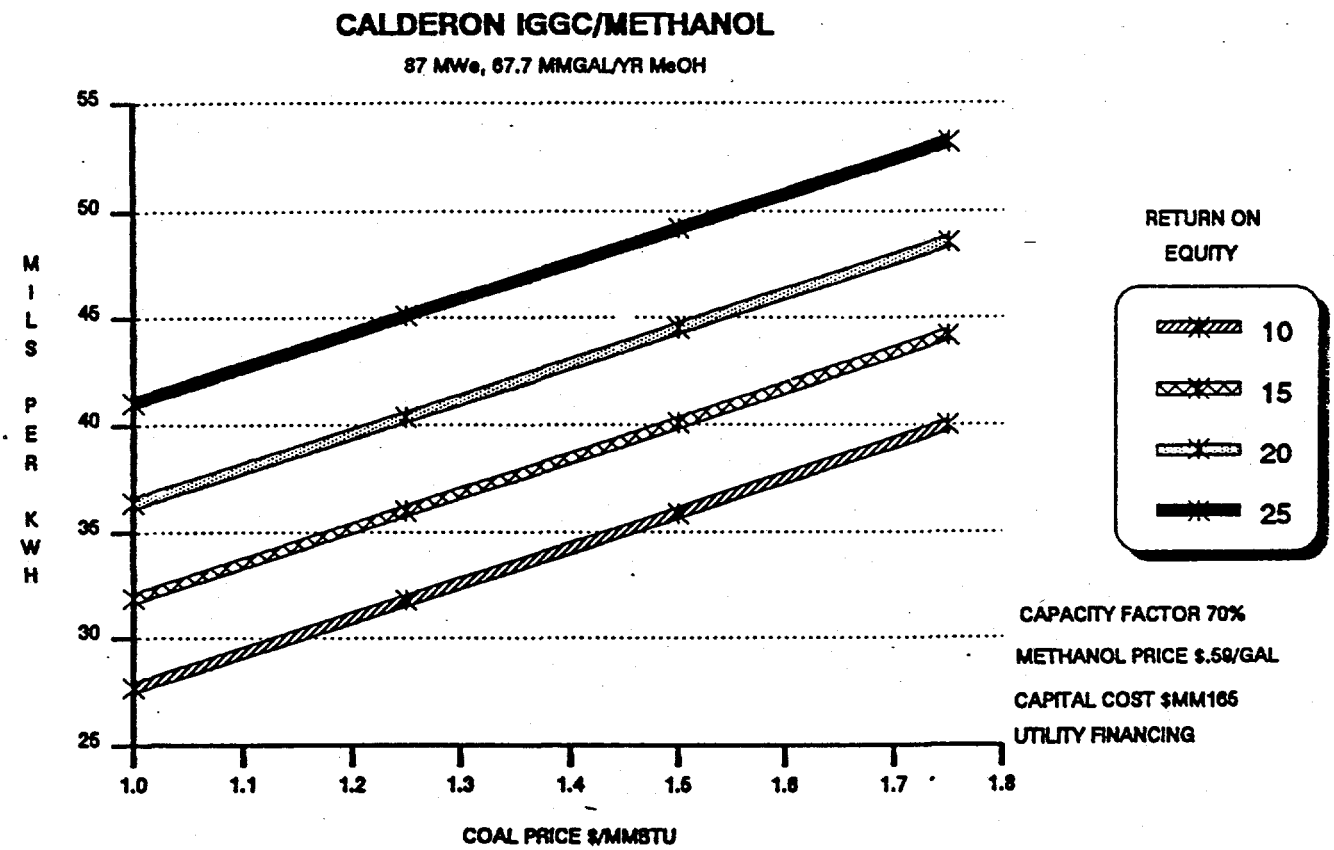

Figure 8-1 **Power Cost Sensitivity to Methanol and Coal Price**

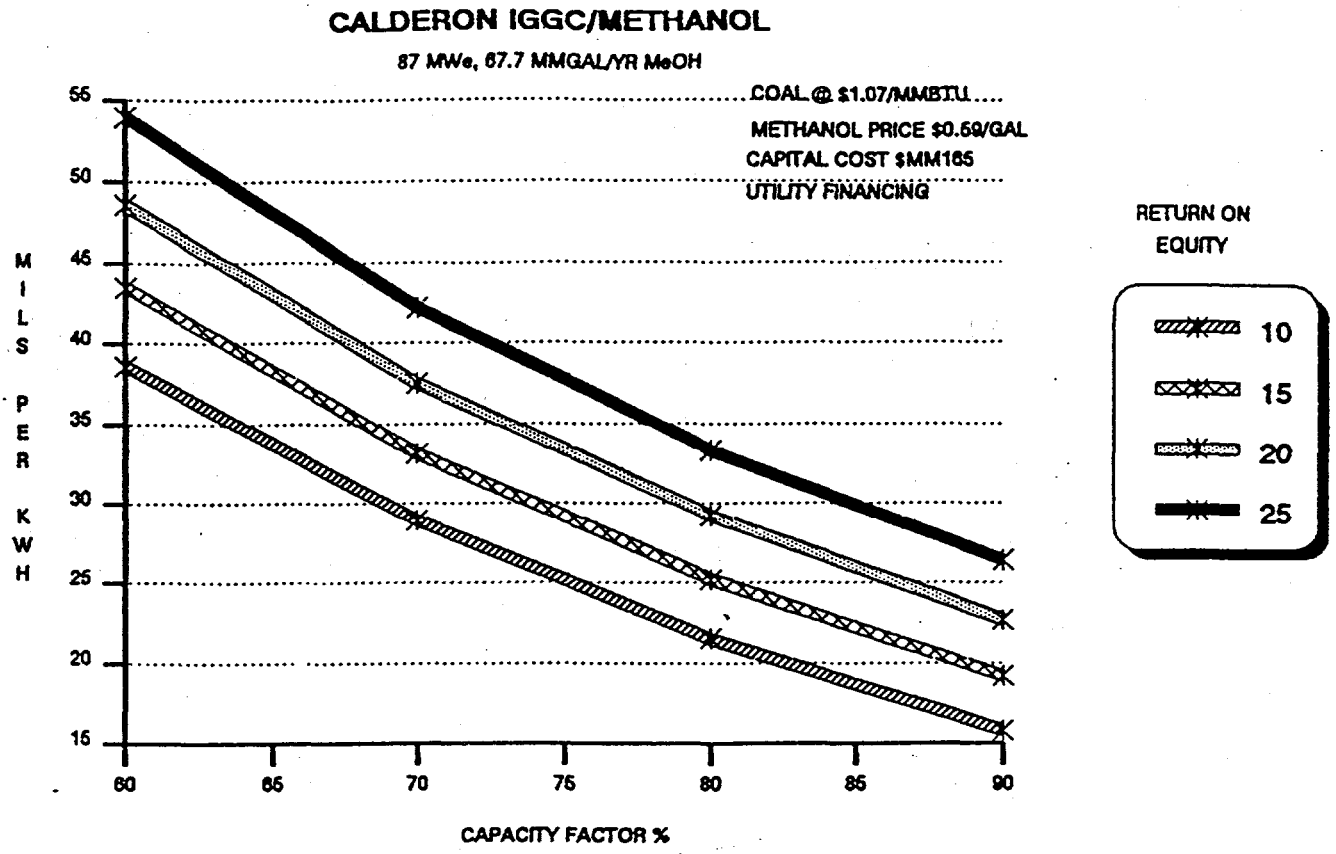

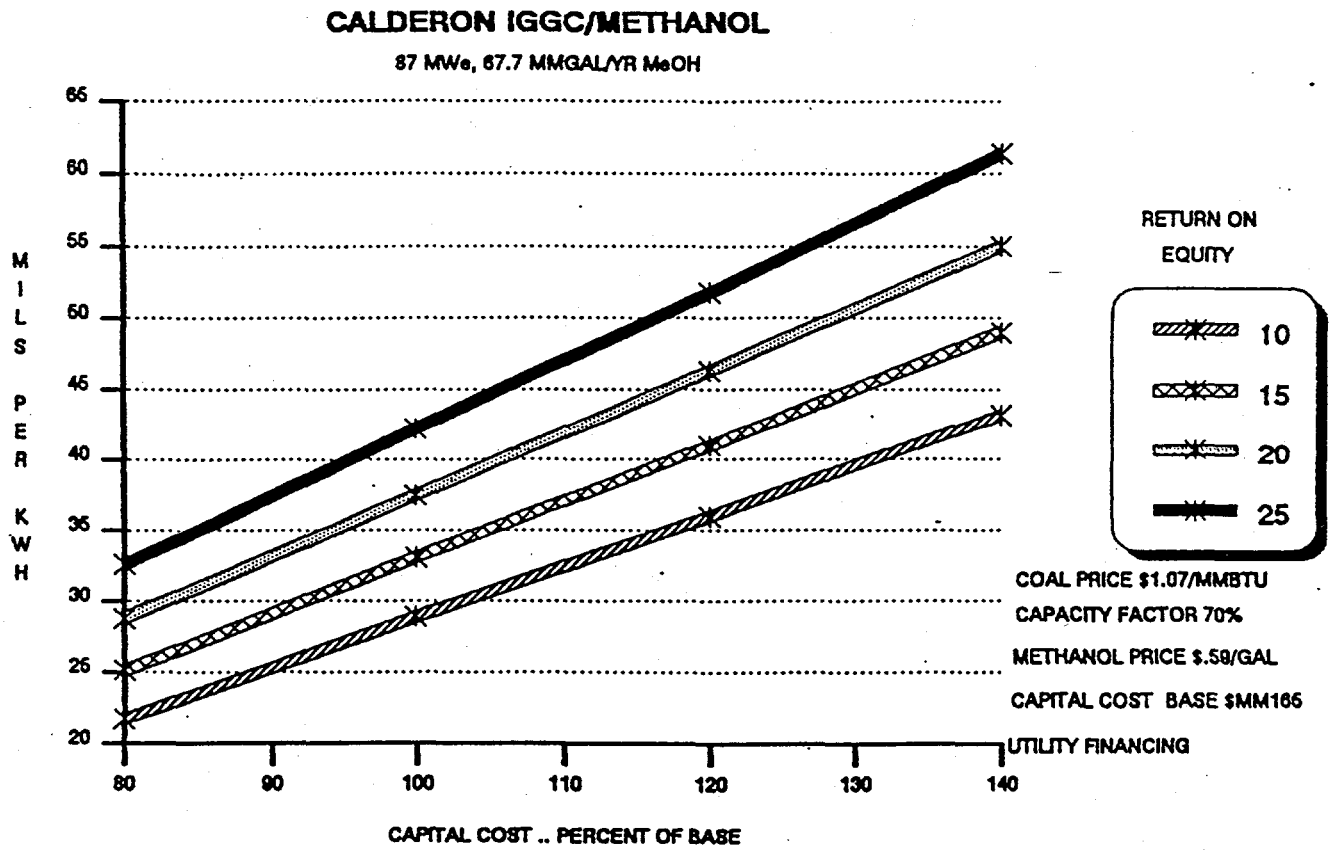

Figure 8-2 **Power Cost Sensitivity to Capacity Factor and Capital Cost**

Table 8-1

FINANCIAL PARAMETERS FOR THE SENSITIVITY MODELING

Federal and State Taxes		40 %
Insurance and Other Taxes		1.5 %
Book Life of Plant		30 years
Tax Life		15 years
Inflation Rate (Capital & Labor)		4%
Fuel Real Escalation		0%
Debt Structure	%	% Return
Common Equity	15	Calc.
Preferred	35	12.5
Debt	50	10