TOM Reel 86, Bag 3979, Item 78,
"EXPERIENCES WITH THE SEMI-COMMERCIAL SYNOL RESEARCH PLANT ME458,
Report No. 472/44A, Leuna Works, October 10, 1944"

INTRODUCTORY REMARKS

This report presents the results obtained with the Synol research unit. In addition to the observations which are particularly important for the operation of a Synol plant, some remarks of a general nature will also be presented.

The plant includes catalyst reduction, synthesis apparatus, carbon dioxide extraction, activated carbon adsorption and distillation units. The individual parts will be discussed in order.

CATALYST REDUCTION

The manner of operation is apparent from the sketch in Figure 14. Proposals for alterations have been presented in memoranda entitled, "Expansion and Improvement of the Reduction Facilities," dated March 6, 1943, and "Reduction of Fused-Iron Catalysts for a 10,000 Ton Per Year Synol Plant," dated July 2, 1943.

Description of Apparatus

Very pure hydrogen (sulfur content less than 1 mg./m^3) enters through two reversible Pattenhausen coke towers (Pattenhausengrudeturme) preheated to 120°C., and a "methanizing" furnace. The coke tower is to provide protection against any possible carry-over of sulfur. In the methanizing chamber, traces of carbon monoxide are converted to methane. The methanizing chamber was later omitted, without resulting in any change in the quality of the catalyst. The hydrogen then enters a recycle stream. For the circulation of 1000 m^3/hour, 3-5 percent of fresh hydrogen is introduced. It is supplied at the bottom of a silica gel tower. From there, the circulating stream passes through the fol-

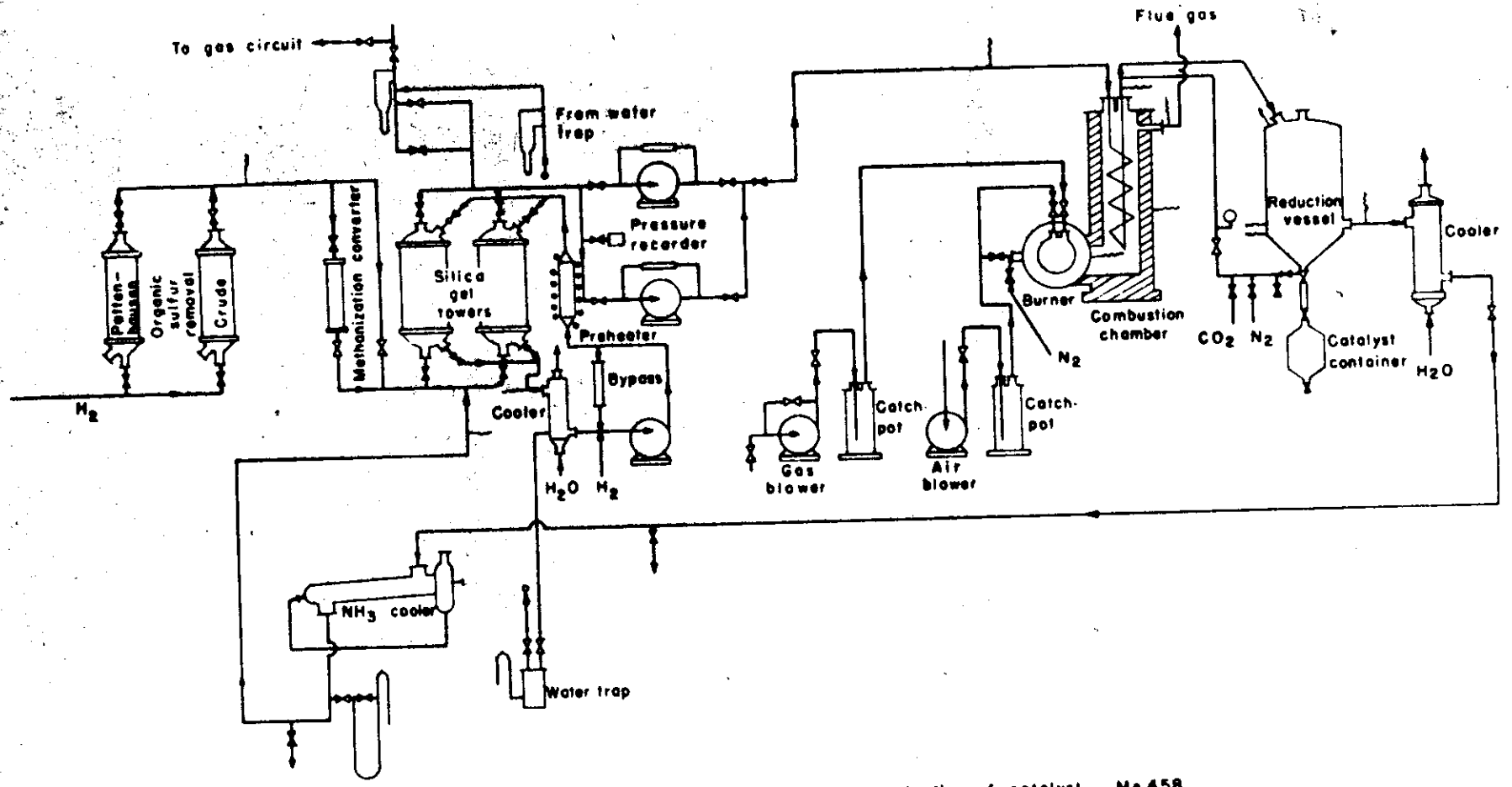

Figure 14.—Flow diagram for reduction of catalyst Me 458

lowing units: Two circulating blowers (capacity, 1050 cubic meters against a pressure of approximately 90 mm. of mercury when the system is heated up), a preheater (Sicromal 7), the reduction chamber, a water cooler and an ammonia cooler. A second circuit consisting of a blower (capacity 300 cubic meters per hour), a high-pressure steam preheater, one or the other of the silica gel towers and a water cooler, accomplishes the drying and final cooling of the saturated silica gel tower.

Reduction Procedure

There follows a discussion of the reduction procedure and the various precautions and observations connected therewith. The catalyst container (diameter 1400 mm.) is filled with approximately 500 liters of fused catalyst (WK17) having a particle size of 0.5-1.0 mm. The catalyst rests on two semi-circular segments, which are attached to two adjacent axles for dumping the catalyst. On these segments there is a 0.3 mm. screen of bronze (iron screen is rapidly destroyed) which must be carefully fitted so that no catalyst can fall through before the reduction. The segments rest on pins which can be inserted and removed from the outside. The pins are made tight by screw cap covers. The threads must be carefully coated with graphite before each reduction since otherwise they will be "frozen" at the reduction temperature (450°C.). After filling, the unit is purged with carbon dioxide. The blowers are started. Since the circuit is calculated for hydrogen, care must be taken that the blower by-pass and the differential pressure gages are closed.

After 85 percent carbon dioxide is attained as determined by Orsat analysis, the circulation is switched to the other coke tower. In the operation of the Oxo plant, it has been observed that high percentages of carbon dioxide under some conditions can set free hydrogen sulfide from the coke tower. This fact must be taken into consideration in the construction of a new plant, preferably in such a manner that the towers continuously contain an

atmosphere of hydrogen and the carbon dioxide is admitted to the circuit on the suction side of the blower.

Again operation is continued until 85 percent carbon dioxide is attained. Then operation is switched to hydrogen by withdrawing the appropriate blind flange. At first 50 m^3 of hydrogen per hour are introduced and later during the reduction 30 m^3 per hour, and the pressure is maintained at 500 mm of water by means of the outlet valve.

At the beginning, it is preferable not to maintain the pressure so low that the outlet must be regulated frequently on account of the large variation in gas density, since carelessness might easily cause a reduced pressure at the blower inlet.

When the carbon dioxide content has dropped to 5-10 percent, and the unit has been tested for leaks with the blowers cut out, the by-passes of the blowers are shut and the burner is lighted. The burner is previously purged with nitrogen for one-half hour. Ignition is accomplished with a gas flame having 6 mm. projections (Ausschlag) for gas and air. The catalyst container is heated in approximately five hours to 450°C. In this operation, an excess of air should be present in the interior. Moreover, nitrogen is added. Gas samples are taken hourly from the preheater in which at least 0.8 percent oxygen is required. During this time, the silica gel towers are dried.

The drying of the silica gel can easily be followed by a recording resistance thermometer, which is introduced at the outlet of the tower in the drying circuit. Figure 15 shows a multipoint temperature chart. It will be noted that there is a transition point in the middle of the temperature curve which results from the fact that heat is consumed for desorbing the water vapor When the temperature again rises steeply the tower is dry and can be cooled, which is initiated by cutting off the preheater vapor. This temperature rise serves also as a criterion for the conclusion of the reduction.

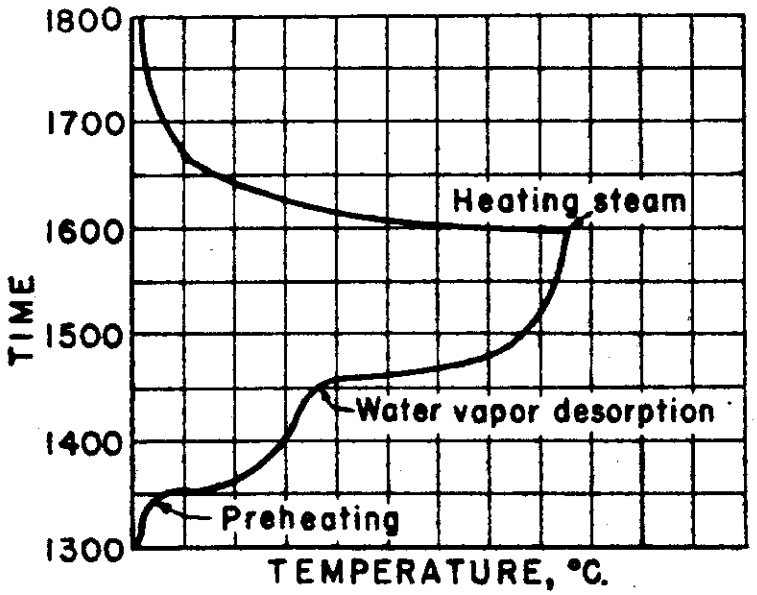

Figure 15.-Temperature record during the drying period of the silica gel.

When no more water is recovered, there is no break in the curve.

The course of the reduction can be recognized by a second characteristic. In the sketch (Figure 16) 1 designates the temperature difference between the middle of the catalyst and the outlet from the catalyst chamber, and 2 represents the difference between the catalyst chamber inlet and the middle of the catalyst. Since the reaction is exothermic the difference 2 is at first great and with increasing reaction declines, while 1 in comparison remains constant.

The water content of the hydrogen beyond the silica gel varies between 0.5 and 2 grams per cubic meter. This determination is carried out most rapidly and easily by passing the gas through a scrubbing flask with 50 cc. of methanol and determining the water content with Fischer reagent. With approximately one gram of water per cubic meter of gas, the methanol can take up as much as 100 mg. of water per 50 cc. of methanol.

At the beginning of the reduction which is carried out with a throughput of 1:2000, so much water vapor is produced that the dew point of the hydrogen-water vapor mixture is above 4°C. and therefore part of the water settles out beyond the ammonia cooler which supercools the hydrogen to 4°C. It is withdrawn through a siphon. The main part of the water is recovered first in the silica gel tower. These towers are switched after each 2-3 hours of operation. Upon drying there will be obtained on the average 3.0 liters of water.

Since some ammonia will be formed on the catalyst and this will also be absorbed by the silica gel, the water is 0.5-1.0 normal in ammonia.

The silica gel towers are filled with approximately 600 liters of silica gel F (4-8 mm.) which rests on the two lower grates of three in the tower, and with approximately 200 liters of silica gel A (2-6 mm.) on the

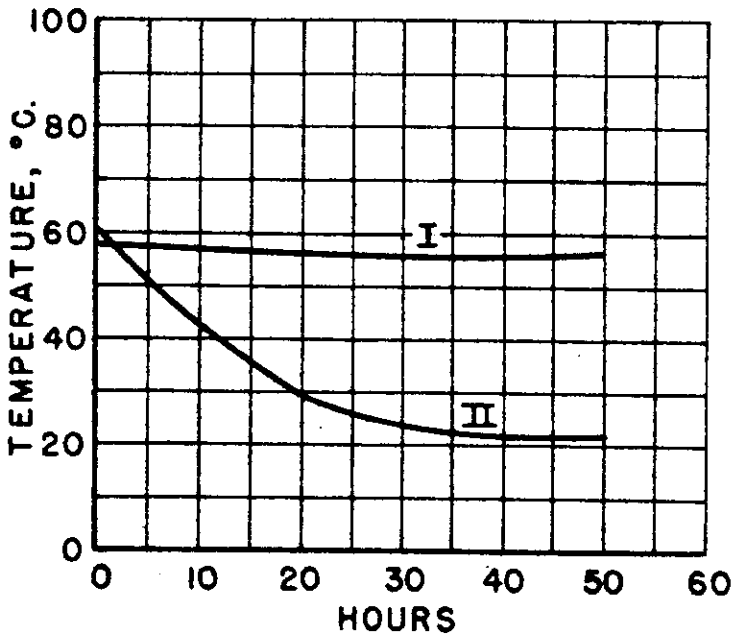

Figure 16.– Temperature differences between the center of the catalyst reduction vessel and the outlet at various times.

upper grate. The original filling was so arranged that gel A was below gel B. After 23 reductions, it was found that gel A rather than gel B had become inactive.

After approximately 50 hours, the reduction is complete. The burner is cut off, and the passage of air is continued until the temperature in the catalyst drops to 50°C. Then carbon dioxide is admitted to the unit slowly. This addition of carbon dioxide must by carried out very carefully with continuous circulation, since the carbon dioxide is taken up by the reduced catalyst with the evolution of considerable heat of adsorption. The coolers remain connected.

The carbon dioxide must be freed from hydrogen sulfide and dried by silica gel. At low temperatures, the catalyst is even more sensitive to moisture than at higher temperatures. The removal of hydrogen sulfide is accomplished by a mixture of lautmasse and clay which has been parted, dried, and then broken up to pea size. From a gas containing 165mg. Of hydrogen sulfide per cubic meter, the sulfur can be removed from 8.5 m3 of gas at a linear velocity of 2.5cm. per second by one liter of pea size lautmasse. For regeneration, the mass is purged with nitrogen to which a constantly increasing quantity of air is added until air alone is being used after approximately 5-7 hours. The mass becomes heated thereby to approximately 40-50°C.

Storage of the Reduced Catalyst

The dumping of the catalyst is carried out under carbon dioxide. A connection with a second pipe is attached to the catalyst chamber. By the use of this movable pipe which fits loosely in the upper opening of the catalyst kubel having a capacity of 150-200 liters, the transfer to the kubel proceeds more easily than with the rigid connection originally provided. The fear that part of the catalyst would come into contact with air under these circumstances has proved to be unfounded.

The storage of the catalyst is carried out under hydrogen pressure (approximately 250mm. hydrogen). That portion of the catalyst which lies directly above the discharge valve in the kubel must be thrown away upon discharge of the catalyst since in spite of the hydrogen pressure, air diffuser into this zone, and small traces of oxygen make the catalyst unusable.

SYNTHESIS UNIT

Description of the construction of the synthesis unit is shown by Figures 17 and 18. Figure 17 shows the original arrangement while Figure 18 illustrates the plant after the latest changes. The converters are of 700-liter capacity. The two converters facing East have tubes of 15mm. diameter, those facing West, 20mm. The number of tubes is 1300 and 700, respectively, per converter. Space velocities varied from 150 to 500. The conversion was 12 percent in the first case and 0.7 percent in the first case and 0.7 percent in the second case.

Starting, Interrupting, and Stopping the Synthesis

After filling with catalyst (see above) the oven system is purged with hydrogen at atmospheric pressure. Then the pressure is gradually raised, and the oven is heated to 170°C. Thereafter the temperature is raised only 2°C. per hour until the desired contraction (determined by carbond dioxide analysis) is reached. These conditions apply strictly only for the fused catalyst, WK17. The temperature is regulated best by the steam inlet valve on the diphenyl preheater, whereby a determined vapor pressure is maintained in the preheater, or it can be undertaken by raising and lowering the water level in the cooler with a siphon. A change is effected ordinarily only after approximately 10 minutes.

During the operating period under all circumstances, care must be taken that the synthesis gas does not remain stagnant on the catalyst since it would then be extensively converted and the resulting water vapor would

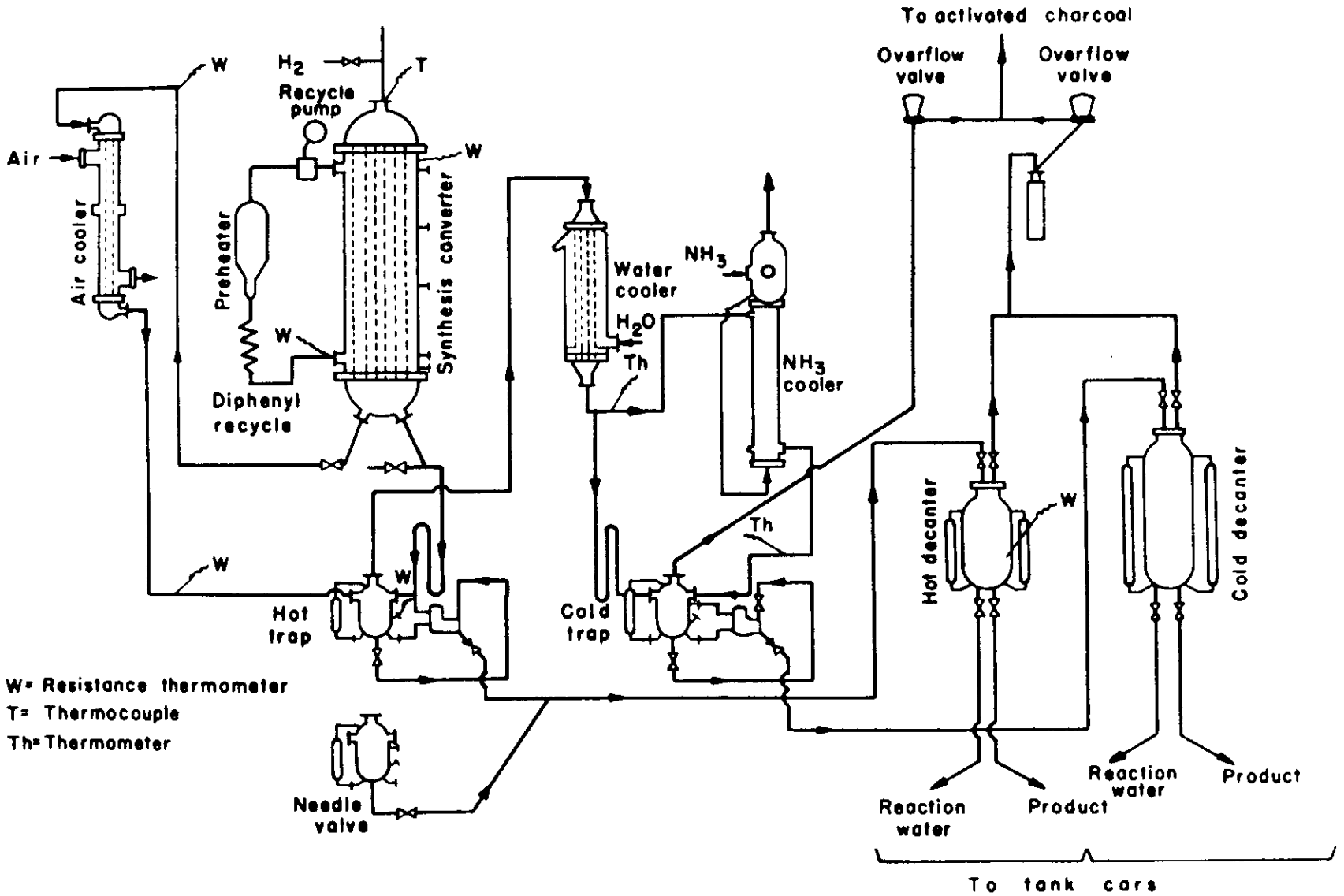

Figure 17.—Synthesis plant (single-unit converter) Me 458 (original process piping scheme).

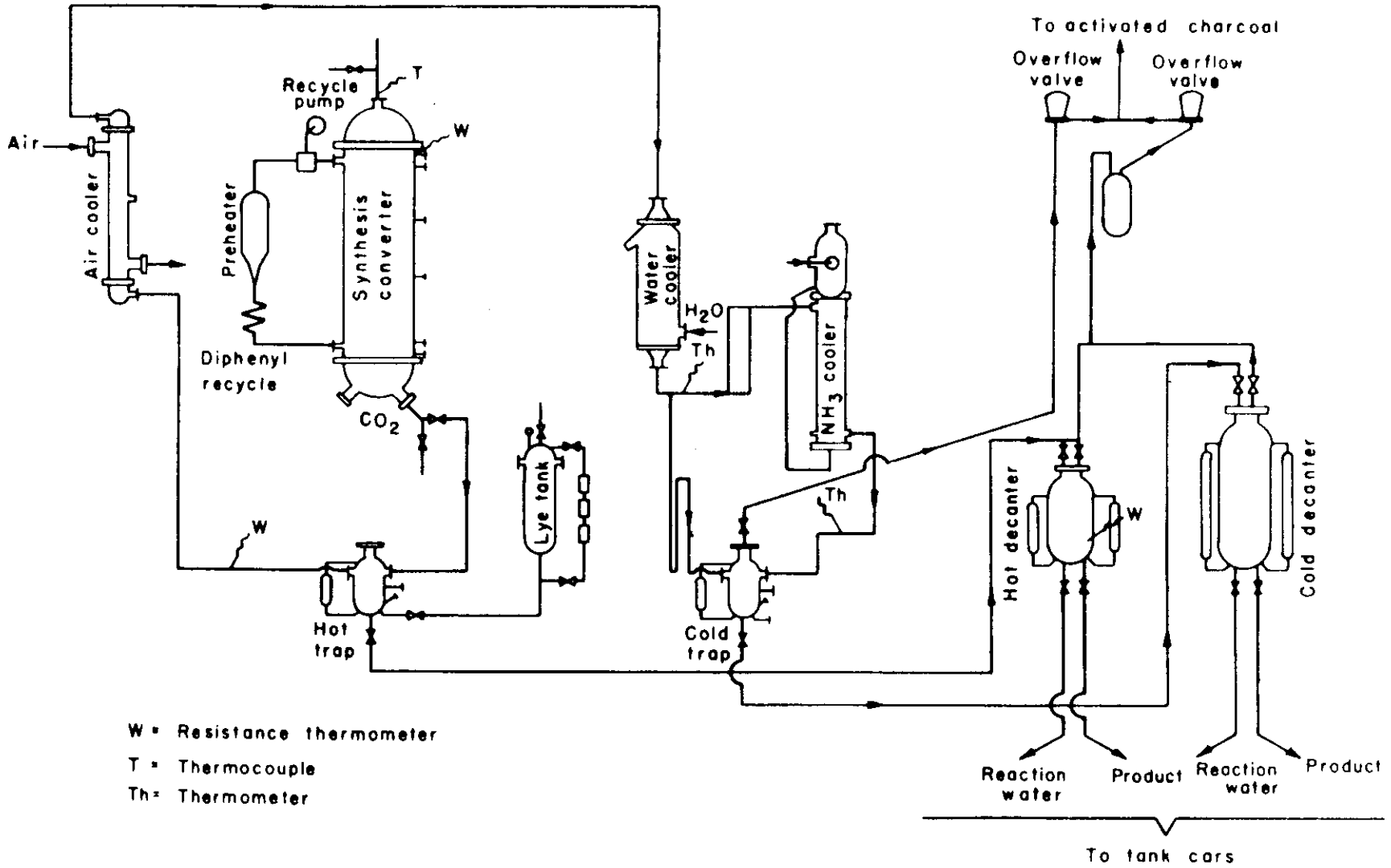

Figure 18.—Synthesis plant (single unit converter) Me 458 (new process piping scheme).

damage the catalyst. For this reason, there is porvided on the gas inlet a connection for gydrogen supply. The hydrogen is delivered through a reducing valve from a 200 atmosphere line. The hydrogen pressure should be somewhat above the synthesis pressure. If the synthesis must be interrupted for any reason then the gas inlet valve is closed and immediately afterwards the hydrogen valve is opened so that the synthesis gas can be replaced by hydrogen at constant pressure. The carbon dioxide content of the outgoing gas is then watched and the outlet valve is closed when the carbon dioxide content has dropped below 0.5 percent. Since the oven will no longer be giving off reaction heat, the vapor pressure must be gradually increased so that the oven temperature will change as little as possible. Pressure and temperature variations are to be avoided since the oven can easily develop leaks as a result of such variation. After each major change of pressure or temperature, it must be tested for tightness.

Plate Reactors

Plate reactors used for firs 14 days were abandoned because of leaks. Recycling was introduced.

High-Pressure Water Washing

The high-pressure water washing was operated only for a short time. Latest findings indicate that removal of CO_2 from the synthesis gas is not necessary.

Active Carbon Plant

Distillation

Distillation details are discussed.

PRESENT STATUS OF SYNOL SYNTHESIS AND SCHEDULE FOR EXPANSION AND IMPROVEMENTS

In the following, the results of work on the synol process will be briefly summarized and the direction of advantageous extentions will be pointed out.

MANNER OF OPERATION

Recycle Operation (Characteristics)

Effect of CO_2 Formation on Conversion.

It has been determined that the water-gas shift reaction can take place on an iron catalyst. In contrast to the cobalt catalyst which consumes carbon monoxide and hydrogren in the ratio of 1:2 and accordingly produces water as a byproduct according to the equation $CO + 2H_2 = CH_2 +$ H2O, the iron catalyst in the hitherto conventional three-stage process causes reaction according to the equation $1.5CO + 1.5H_2 = CH_2 + 0.5H_2O + 0.5CO_2$. Accordingly, from each six mols of synthesis gas there is obtained from this conversion one mol of carbon dioxide. Consequently, it is necessary to wash out the CO_2 if a conversion of 85-90 percent of the available gas is to be attained. A higher conversion if possible is always desirable especially if a highly purified gas is involved (S less than 5mg. per cubic meter).

If the gas is recycled and the major part of the reaction water resulting from each passage through the catalyst is condensed, then the formation of CO_2 can be so limited that 90-93 percent of the synthesis gas (with an inert content in the fresh gas of about 6 percent) can be converted without the necessity of washing out the CO_2.

Life of Catalyst.

The life of the catalyst depends on the partial pressure of water. At a recycle rate of 2500 cubic meters per m^3 of catalyst, a catalyst can be used for seven months without appreciable decline in its activity, while in the 3-stage operation the activity constantly declineds to that a life of three to four months at best is not exceeded. A series of experiments demonstrated that with further increase in the partial pressure of water vapor, the catalyst activity declines in a much shorter period of time.

Products.

The alcohols and olefins which can be dehydrated or hydrogonated by the action of the catalyst will be separated more rapidly from the catalyst zone. An increase in the alcohol content is particularly notable in the higher boiling portions (C_{14}-C_{17}), since the increased quantities of carrier gas associated with recycle operation maintain these components to a higher degree as vapors and as such separate them reapdly while at smaller throughputs, they are dissolved in the liquid phase and trickle over the catalyst.

Space Velocity.

The high gas throughput accomplishes an increased removal of heat in the catalyst zone. Therefore, it is possible either to increase the conversion or to space the cooling elements in the oven farther apart thereby simplifying the construction of the oven and making it much easier to discharge the catalyst, which particularly in the case of a fused catalyst presents a difficult problem.

Separation of Products.

In connection with the separation of the products there are certain advantages which will be considered more specifically later.

All of these advantages are increased as the rate of gas circulation is increased. A high recycle rate requires especially high power input, larger heat exchange surfaces, and greater amounts of heat for preheating and cooling water for cooling.

Summary of Recycle Operation.

On the basis of experience to date with the 15-liter oven, operation can be carried out advantageously with a throughput between 1:2000 and 1:3000 cubic meters of gas per cubic meter of catalyst. (Presumable per hours. Trans.) Under such conditions a gas containing 6 percent of inerts can be utilized to 90-94 percent. From 12 mols of gas there will be produced one mol of carbon

dioxide. Advantageously, the conversion is accomplished in two stages. In the first stage, 70-80 percent of the gas is converted so that the inert gas level is held within desired limits, since the declining partial pressure of carbon dioxide and hydrogen results in a reduced yield of liquid products and an increase in the production of gasol and methane. Also the reaction temperature rises whereby the catalyst life and the content of alcohols decline somewhat. The remainder is converted in the second stage. The somewhat higher gasol production relative to the total yield is of little consequence.

The experiments so far have been conducted in a 15-liter oven. A 2.5 m^3 plate oven for recycle operation in ME458 has been constructed, but has not yet been put into operation. The oven can be operated as desired either as one-stage or two-stage. The experience obtained from this operation can be used as a basis for going over to commercial operation.

Recycle and "SUMPF" Phase

The preparation of synol in the "sumpf" phase has not been followed up at Leuna because the valuable products thus produced (alcohols, olefins, and esters) remain in prolonged contact with the catalyst in such operation and consequently are particularly likely to be decomposed. Furthermore, experiments carried out by Dr. Michael with our synol catalyst in "sumpf" phase operations showed no particular advantage. However, it appears desirable to take up the investigation of this method of synthesis in combination with recycle. The characteristic pointed out in the above section on products, that sufficiently high recirculation auses a large part of the higher boiling products to leave the reaction zone in vapor form, would indicate that the time of contact of these materials in the "sumpf" phase would be of the same order of magnitude as in operations with a fixed-bed catalyst. In addition, effective agitation of the liquid vehicle would result from the large volume of gas in circulation. Furthermore, the effect of catalyst particle size would

also come into play as will be discussed in greater detail in the section on catalysts. A 15-liter reactor has been built for this purpose, but has not been tested.

On account of these and other technical advantages of the "sump" phase operation (more effective removal of the reaction heat with a considerably smaller number of cooling elements, easier discharge of the catalyst, and the charging of fresh catalyst or additions to the catalyst without interruption of the synthesis) this method of operation should be investigated further.

First the available 15-liter reactor can be set up for this further work. It consists essentially of an insulated 100 mm. tube above which a 200 mm. tube is placed as a settling zone. Heating is accomplished by two vertical tubes carrying water under pressure. The gas would be introduced at the bottom in the beginning without any special arrangement for distribution. Subsequently, fritted or perforated plates can be tested. The products which are not withdrawn from the reactor in the vapor state (apparently about 10 percent of the total product) will be withdrawn in the beginning discontinuously through a ceramic filter located approximately at the middle of the reactor.

The reactor is filled at the start with paraffin from the synol synthesis, which is first pretreated with hydrogen if it has been standing long in contact with air, so that any possible damage to the catalyst can be avoided. The first experiments will be carried out with a previously reduced NN17 catalyst ground under oil and CO_2, with the amount of catalyst being varied. The gas throughput should lie between 1:2000 and 1:3000. At these throughputs, small-scale experiments have shown that liquid and catalyst are well agitated. Subsequently, experiments will be carried out with granular reduced precipitated catalysts which in general are easily disintegrated to a fine powder (for choice of catalyst see the catalyst program).

In these experiments, it is important to guard against spraying and fog formation which would result in a drop in the liquid level. Preliminary experiments with paraffin without added catalyst have shown that this effect prevails within moderate limits.

Conversion and Yields.

The space yields of the Fischer-Tropsch and similar syntheses are small in comparison with those of high-pressure synthesis, hydrogenation, and methanol production. This results in the first place from the fact that the process is highly exothermic (700 kg. cal./m^3 of reacted gas) and at the same time, the reaction temperature must be held within narrow limits (3-5°C.) if the conversion is not to stop completely or run away. In the atmospheric pressure synthesis of naphtha with cobalt catalysts, approximately 80 m^3 of gas are converted per m^3 of catalyst per hour; in the pressure synthesis developed later, conversions of 100 m^3 are attained. The conversion in the 3-stage synol process is about 1:120. After the introduction of the recycle method of operation, the conversions were increased by 25 percent to 150 m^3. The optimum is yet to be determined with longer periods of operation and particularly in combination with the testing of new reactors with different arrangements for cooling.

The yields amount to 170 grams of products heavier than C_2 per m^3. Ten percent of the converted synthesis gas is consumed in methane formation. Of the 170 grams, 35 grams are gasol and 30 grams are paraffin hydrocarbons boiling above 400°C. It is a characteristic of the fused-iron catalyst (ammonia catalyst) that it makes a relatively large amount of gasol and paraffin. This will be discussed further in the section relating to catalysts.

The content of alcohols in the lower-boiling fractions lie between 50 and 65 percent. From about C_{14} upward the alcohol content begins to decrease. At C_{16}, about 30-40 percent of alcohols is reached. Still higher

fractions show only a small content of alcohols. The sum of the alcohols and olefins declines from 60 percent in the lower fractions to 65 percent in the boiling range of the C_{18} alcohols. The alcohols are primary and straight chain, the olefins likewise. The higher fractions contain esters to an increasing extent, rising from about 10 percent in the region of C_{10} alcohols to 20 percent in the region of the C_{18} alcohols. The content of aldehydes and ketones in all fractions amounts to 1-2 percent.

The yields of liquid products can be still further increased at the expense of gasol by going over to precipitated catalysts. Further work in this field will be concerned with the evaluation of catalysts.

Catalysts

Of late, investigations in the field of catalysts have been put aside in favor of instituting and evaluating new variations in the manner of operation. In this field of catalysts, however, there are still many questions unanswered, and as things now stand, material improvements in the product quality can be expected particularly from changes in the catalyst.

Influence of reduction conditions on activity.

For larger scale experiments in all cases, the fused-ammonia catalyst FM17 will be used. Earlier experiments have shown that this catalyst must be reduced with high throughputs (1:2000). Too high a content of water vapor in the hydrogen used for reduction damages the catalyst to an even greater degree than is the case with synthesis. In experiments carried out recently in which the water vapor was added to the reduction hydrogen, to the extent of 5 grams of water per m^3 of H_2 throughout the reaction period, no appreciable impairment of the catalyst was noticed, while with 15-20 grams, a noticeably less active catalyst was obtained. A high degree of purity of the H_2 is essential. The catalyst reduced with H_2 recirculation (addition

of 3-5 percent fresh H_2) is considerably better than a catalyst reduced by once-through operation. For this reduction, a very pure hydrogen is used having a sulfur content less than 2 mg. per m^3.

Influence of particle size on activity.

A substantial increase in the catalyst capacity can be attained by going to smaller catalyst particle sizes. Most recently, operations have been conducted with particle sizes of 0.5-1.0 mm. in contrast with the size of 1-2 mm. used previously. In using still smaller particle sizes, the pressure drop through the oven becomes too high. From the higher capacity of the more finely divided catalyst, it is concluded that the interior of the catalyst particles does not play an essential part in the synthesis. With precipitated catalysts, particle sizes of 1-2 mm. cannot be exceeded, since otherwise on account of the low mechanical strength and resultant high dust formation, the oven will be too easily plugged up. Also, in the case of fused catalysts, a certain amount of dust formation results from shaking and transportation. Therefore, for further experiments, it is intended to fill the lower part of the oven with a layer of coarse catalyst. Thereby the openings in the grate on which the catalyst rests can be larger since in this location a partial disintegration is to be expected first.

Changing to smaller catalyst particle sizes accomplished at the same time a reduction in the synthesis temperature from 198 to 191°C. at the same conversion, if in one case particles of 1-2 mm. diameter and in the other case 0.5-1 mm. are used. At the same time, there occurs a shift in the water-CO_2 ratio in the direction of increased water formation, since the water-gas shift also declines with a reduction in the temperature.

An explanation for this difference which apparently depends only on the structure and not on the chemical composition of the catalyst cannot be given at present.

One significant observation in this connection should still be noted. In a few cases for no apparent reason the WK17 catalyst yielded from the beginning 30-45 percent boiling above 400°C. This phenomenon still requires explanation (see, for example, Experiment No. VII/67 in 200cm. tube oven). By increasing the carbon monoxide content of the gas the boiling range can be shifted toward the higher boiling points with all kinds of catalysts, without essential change in the quantity of the middle fraction. A similar shift in composition can be obtained by changing to smaller catalyst particle sizes and by the use of lower throughputs. At the same time, these changes result in an increase in the olefin content of the product. The content of alcohols remains approximately constant. Those experiments have been carried out hitherto only in the stage process and must be extended to the recycle type of operation.

Effect of Catalyst Composition on Synthesis Products.

Regarding the effect of catalyst composition on the synthesis products, the following can be said. The potassium content must be between 0.15 and 0.5 percent. The optimum here is the same as with ammonia catalysts. When acidic constituents, such as silica carriers, are added the potassium content must be increased and the optimum redetermined. The addition of manganese to the catalyst causes the alcohol formation to decline in favor of olefin formation. The addition of arsenic in amounts of a few tenths of a percent increases the formation of esters.

A large number of early experiments could not be properly evaluated because the exact effect of the potassium content in the catalyst preparation had not yet been determined and therefore, with unfavorable potassium contents, the effect of other additions could not be appraised. A content of 2-4 percent alumina as in the case of ammonia catalysts increases the activity. The experimental development of catalysts will be continued on the basis of the iron-potassium-aluminum composition (refer to the previously presented catalyst program). The program for carrying forward work along these lines has already been established. The next objective should be the preparation of a catalyst of reproducible activity, by precipitation from iron and aluminum chloride. Emphasis should be laid particularly on the development of the simplest possible method of preparation, especially so far as the introduction of specific amounts of potassium is concerned. In one series of experiments, the washing of a catalyst precipitated with a potassium carbonate solution will be carried out with dilute potassium carbonate solution instead of with water, using such a concentration that a desired constant end value will be attained so that there need not be so much concern about the exact quantities of wash water used. In a second series the precipitation will be undertaken with ammonia water to which a suitable amount of potassium carbonate is added so that after one or two washes the desired potassium content is attained. In a third series, the precipitation conditions (temperature, concentration) will be varied.

Converter Construction and Various Technical Details

The synthesis is carried out in converters which contain a large number of cooling elements. The apparatus most frequently used on a large-scale is the plate converter, which consists of a packet of parallel plates approximately 7 to 8 mm. apart which are penetrated crosswise by tubes through which cooling water can flow under pressure.* Steam is made at 25 atmospheres

*Figure 19.

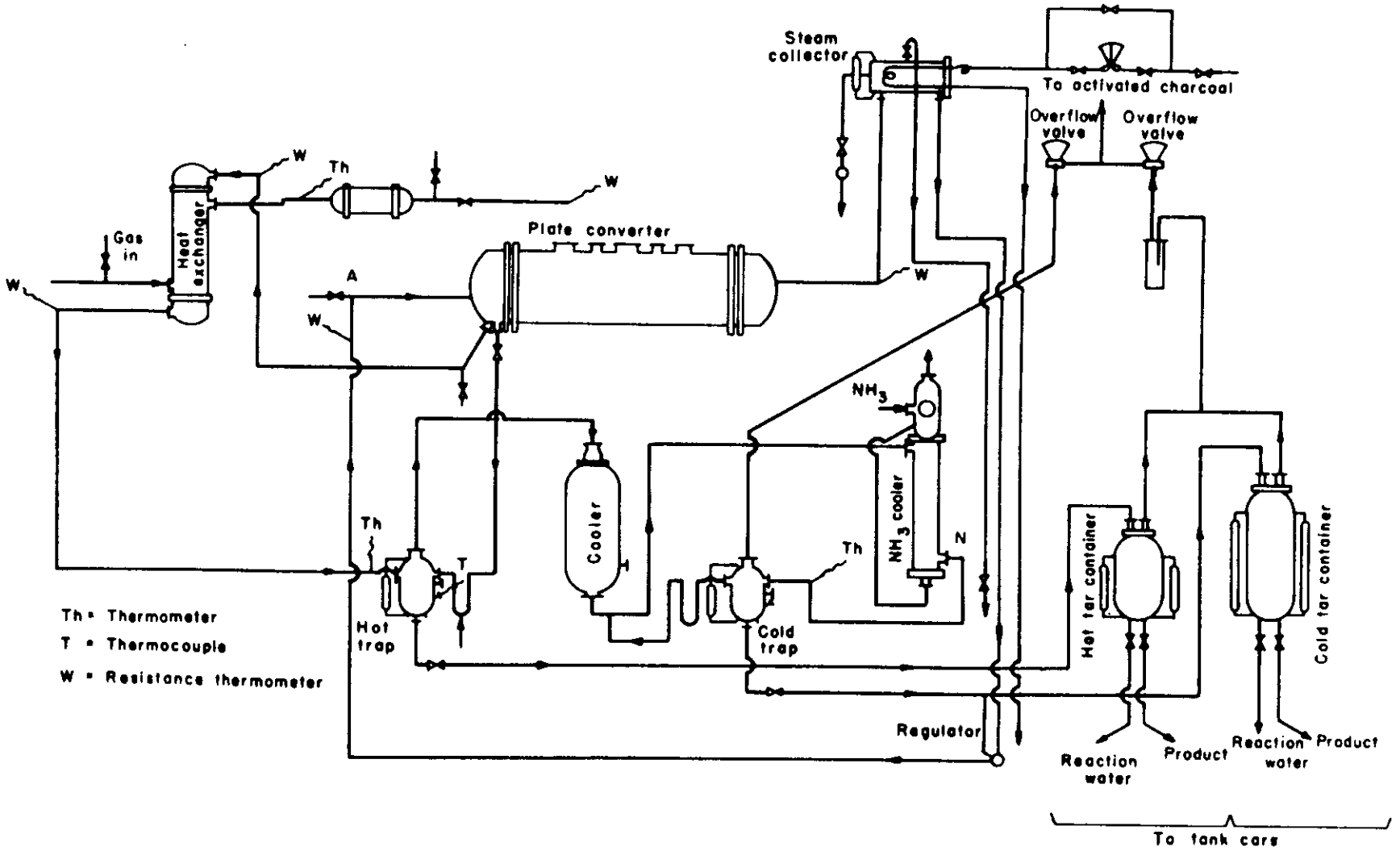

Figure 19.—Synthesis plant (plate converter) Me 458.

pressure, corresponding ot 225°C. When the operating temperature of the converter is higher, it is necessary to use diphenyl, Decalin, or some similar cooling medium for controlling the temperature. The great advantage of the synol process over the other processes using iron catalysts is that the operating temperature is comparatively low (185-200°C.), and, consequently, all converters can be cooled by water. With fused catalysts, the use of the plate converter leads to considerable difficulties. Recently, therefore, converters without the plates were introduced. The apparatus contains a group of horizontal tubes, and the catalyst is arranged outside these tubes. The converter is slightly tilted to facilitate the steam removal. This converter may be easily emptied, and any traces of catalysts which stick between the tubes can be removed by wire. Emptying the plate converters was more difficult; it was necessary to treat each section individually.

When a recycling procedure is used, the gas throughput may be increased seven-fold and the distance between the tubes increased to 15mm. and a 25 percent greater efficiency is obtained.

The tubes are rolled into tube sheets on both ends. Experiments showed that 21mm. diameter tubes 5m. in length were satisfactory. It is preferable to arrange the tubes an angle of 10° from the horizontal. The converter was filled with 200 liters of catalyst. The catalyst is arranged around the tubes which are contained in an open container the sides of which may be removed. Below the box there is a trough. The exit gas leaves the catalyst chamber with the paraffin product.

The right part of the converter is filled with water. The cooling tubes have a diameter of 14mm., a length of 1700mm., and are 9.8mm. apart. The tubes are rolled into two tube sheets. The use of two tube sheets guarantees a greater rigidity of the apparatus.

Experiments in the 15-liter converter indicate the desirability of removing the liquid products immediately after the gases leave the converter.

Early experiments have shown that at recycle space velocities of 2500, only negligible quantities of materials boiling below 360°C. are present. Preliminary separation of the products may thus be effected. Further, all the inherent difficulties connected with handling of semi-solid materials are removed.

Corrosion experiments in the 100-liter converter show that the upper permissible temperature can be determined for which the material is noticeably attacked by the organic acids in presence of water. For multi-stage experiments, this temperature is approximately 130°C. Between 125 and 90°C., the corrosion reaches a maximum and at lower temperatures decreases. The recycling is employed, the condensation point of the aqueous phase is somewhere between 75 and 95°C., depending on the degree of recycling. In the case of the planned experiment in ME458, an irrigation with soda solution is maintained when working in this temperature range. By means of proper by-passes around the heat exchangers, the temperature can be manually controlled. Corrosion tests are being planned for various sections of the apparatus during the recycling operation.